Thank you for purchasing this high quality Banlaw product. Please read through and understand the information in this Product Data Sheet (PDS) BEFORE installation or operation of the product to avoid accidental personal injury or property damage.

1 PRODUCT DESCRIPTION

Banlaw Dry-Break Diesel Refuelling Nozzles are fluid (e.g. diesel fuel) dispensing couplings which incorporate both calibrated (automatic) pressure shut-off, and "dry break" functions.

Banlaw introduced their first dry-break diesel refuelling nozzles into the market in the 1980's in response to a requirement for a more ergonomic and robust "industry standard" nozzle rated for higher diesel flowrates.

800 Series **1000 Series**

Figure 1 - Examples of Banlaw Nozzles

Figure 1 shows examples of current Banlaw 800 and 1000 series Nozzles. The "800" refers to the maximum rated diesel flowrate of 800LPM (211GPM) of the 800 series, and likewise the "1000" refers to the maximum rated diesel flowrate of 1000LPM (264GPM) of the 1000 series.

Banlaw Nozzles are available in a variety of models (variants) within each series, including the Banlaw FuelTrack™ Nozzles incorporating the Banlaw proprietary automatic (vehicle) identification – i.e. "auto ID" – feature. Banlaw Nozzles also incorporate other features including the patented# means of adjusting the automatic shut-off setting (# US 6,622,760).

The 800 series "Mining" Nozzles are compatible with the industry standard refuelling "receivers", commonly used as the means of refuelling plant equipment and smaller bulk diesel storage tanks in the mining and construction industries. Other 800 series models – e.g. "Rail" – and Banlaw 1000 series Nozzles are only compatible with the matching Banlaw receiver.

This document specifically covers the principal specifications, installation, commissioning, operation, maintenance and servicing requirements and guidelines of Banlaw 2" (DN50) Diesel Refuelling and Fluid Transfer Nozzles. End-users requiring additional information should refer to the Banlaw website, contact Banlaw or your nearest authorised Banlaw distributor. Similarly, persons wanting information other Banlaw refuelling products and Nozzle accessories should also refer to the website or same contacts.

CAUTION	
	***The content of this document is <u>not</u> meant to override or substitute any applicable Statutory, Regulatory, Customer/Site, etc. Health Safety & Environment (HS&E) requirements.***
	All works should only be performed by trained, qualified and competent personnel who are aware of the hazards associated with the constituent components of this installation in addition to the "system" as a whole. Failure to comply with these practices may result in death, serious bodily injury, loss of equipment and environmental damage.
	A risk assessment (job hazard analysis - JHA) should be conducted PRIOR to the start of any works or actions within this document. Whilst every effort has been made to ensure the execution of this document represents no HS&E hazard, Banlaw takes neither responsibility nor liability for the consequences and damages that may occur in the execution of works within this document.
	Persons conducting or otherwise involved with the execution of the works within this document and project have an obligation to ensure that all HS&E requirements are known and understood, and subsequently followed at all times.

Contents

1.1 Glossary of Terms

The following glossary defines key terms used within this document.

Dry-Break	An industry term used to describe a fluid coupling which is of the "normally closed" or liquid tight state whilst ever this coupling remains disconnected from its mating coupling. Fluid (fuel) pressure may exist within the coupling, although no fluid discharge may occur whilst the coupling remains in the normally closed (dry-break) state.
Nozzle	A female refuelling coupling (coupler) – sometimes referred to as a "fuel gun" - normally attached to the end of the dispensing (supply) line (e.g. dispensing hose). A Nozzle engages with a Receiver to form a sealed (liquid-tight) connection for the pressurised transfer of a liquid (e.g. diesel).
Receiver	A male refuelling coupling (coupler), normally attached to the inlet of the vessel to be filled via the Nozzle.
Tank Vent	For the purposes (scope) of this document, a Tank Vent (or Vent) shall refer to a Banlaw Vent (or Vent of same kind) specifically designed to be compatible with the Banlaw quick-fill refuelling system.
Quick-Fill	An industry term used to describe a complete dry-break diesel refuelling system, consisting of a Nozzle, Receiver and Tank Vent(s). This system is the same kind as the Banlaw refuelling system, specifically a system which relies on the closure of the Tank Vent(s) once the Tank(s) is refilled, the short-term pressurisation of the Tank(s), and the automatic shut-off (i.e. closure) of the Nozzle.
Overfill Protection (OFP)	Refers to a system designed to supplement (complement) a Quick-Fill System, but where the OFP system acts as the primary (first) means of terminating the inflow of liquid into the tank without the need for pressurisation of the tank(s).
Flash Point (FP)	"The lowest temperature, corrected to a barometric pressure of 101.3kPa(a) (i.e. 1 atm), at which application of a test flame causes the vapour of the test portion to ignite under the specified conditions of the test." [AS1940-2004].
Combustible Substance (Liquid)	"Any liquid, other than a Flammable Liquid, that has a Flash Point, and has a Fire Point that is less than its Boiling Point." [AS1940-2004]. Other definitions denote a combustible liquid as having a Flash Point of >60.5°C (>140.9°F). In addition; "**Combustible liquids that are stored, handled or processed at a temperature T ≥ (FP−6°C) should be considered as flammable liquids.** Zonal (hazardous area) distances for such liquids should be determined accordingly in accordance with this Standard unless a detailed classification indicates otherwise." [AS/NZS 60079.10.1-2009 ZA.5].
Flammable Substance (Liquid)	"Liquids, or mixtures of liquids, or liquids containing solids in solution or suspension which give off a flammable vapour at temperatures of not more than 60.5°C (140.9°F), closed cup test, or not more than 65.6°C (150.1°F), open cup test, normally referred to as the Flash Point." [AS1940-2004]. In addition; "**Combustible liquids that are stored, handled or processed at a temperature T ≥ (FP−6°C) should be considered as flammable liquids.**
Diesel Fuel	Clean (filtered) automotive grade diesel fuels, including summer and winter blends. Excludes heavy distillates, e.g. bunker oils, heavy fuel oils (HFO), etc.
Explosive Atmosphere	"Mixture with air, under atmospheric conditions, of flammable substances in the form of gas, vapour, dust, fibres, or flyings which, after ignition, permits self-sustaining flame propagation." [AS/NZS 60079.10.1-2009].

Hazardous Zone	"An area in which an Explosive Atmosphere is or may expected to be present, in quantities such as to require special precautions for the construction, installation and use of equipment." [AS/NZS 60079.10.1-2009]. The classification of a Hazardous Zone is conducted in accordance with the governing Standards – typically specific to regions/countries, in the absence of universal (harmonised) Standards.
Spring Setting	Within this document "spring setting" applies to the setting of the automatic shut-off (closure) feature of a Nozzle. This feature is responsive to liquid (i.e. diesel) pressure within the Nozzle and can be adjusted by changing the specification of the Piston Spring within the Nozzle ***and/or*** the specification of the Poppet Spring within the Receiver. In simple terms, *increasing* the spring setting will *increase* the liquid pressure at which the Nozzle will automatically shut-off, and decreasing the spring setting will decrease the pressure required for shut-off.

1.2 System Overview

Banlaw Dry-Break Diesel Refuelling Nozzles are a key component used in "quick-fill" refuelling systems.

Banlaw Nozzles provide a means of fuel shut-off and are often used in systems incorporating storage tank Overfill Protection (e.g. Banlaw FillSafe™ Zero, FillSafe Power) and fluid asset management systems (i.e. Banlaw FuelTrack™ Banlaw ResTrack™).

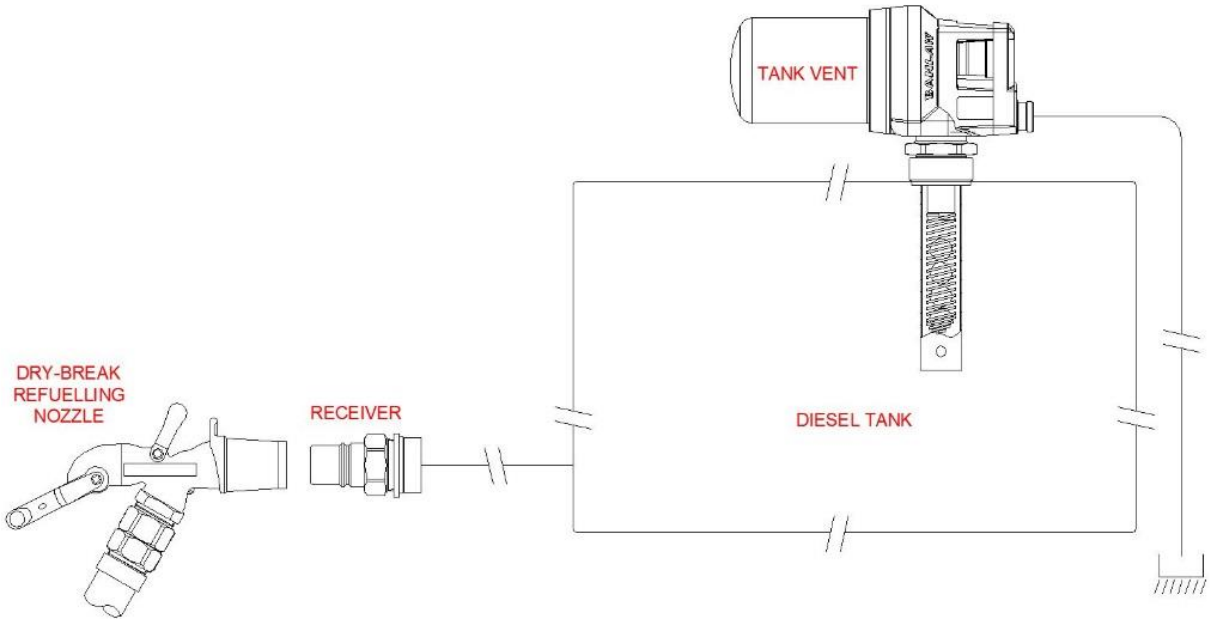

Figure 2 – Example of a "Pressurised Tank" Refuelling System

The example shown in Figure 2 is a basic "quick-fill" tank refuelling system incorporating Banlaw Nozzle, Receiver, and Tank Vent. The means of fuel flow shut-off in such systems is by closure of the Vent, (internal) pressurisation of the tank, and automatic shut-off (closure) of the Nozzle. Incorporating a Banlaw FuelTrack Receiver provides a means of identifying the unique asset "tag" (code) of the tank within the FuelTrack or ResTrack system.

The example shown in Figure 3 is a refuelling system using a separate means of tank OFP – specifically a Banlaw FillSafe™ Zero system. In this example, the Banlaw "pressurised tank" system acts as a backup in the unlikely event the primary OFP fails.

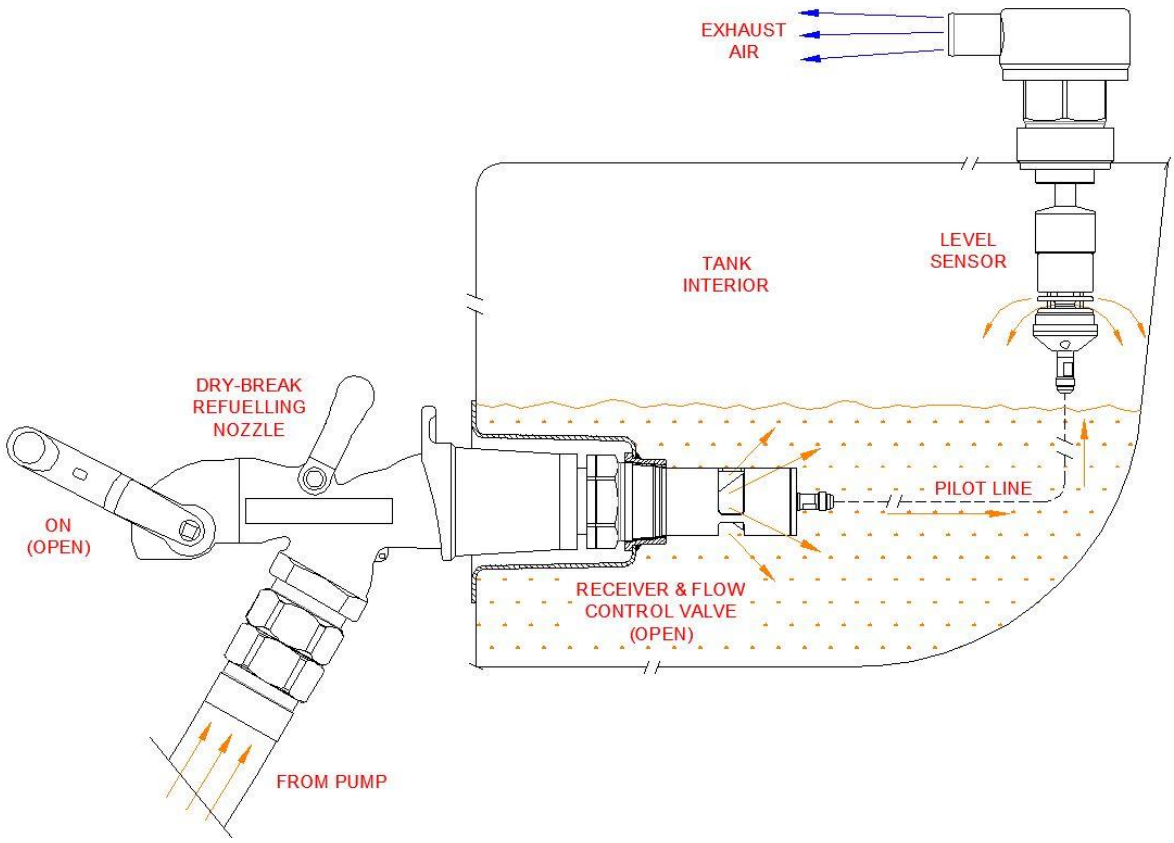

Figure 3 – Example of a "Pressurised Tank" Refuelling System with Separate OFP

1.3 Key Features

Since their inception, Banlaw refuelling nozzles have evolved as a key part of Banlaw's commitment to innovation and continuous improvement. Considered a market leader, Banlaw nozzles provide industry-leading standards of safety, reliability, durability and serviceability. Designed to provide an extended service life, some of the earliest generation of Banlaw nozzles are still being serviced and returned into operation!

Key advantages of Banlaw nozzles include;

- Patented means of adjusting the automatic shut-off (closure) setting, accommodating a ***wider variety*** of refuelling applications.
- Banlaw 800 model "Mining" series Nozzles (e.g. BNM800M) suit ***all*** industry standard Receivers, e.g. Wiggins ZN2 & JNX series, Caterpillar, FloMAX FR series, etc.
- Industry-proven ***ball lock*** latching mechanism, providing superior safety and durability.
- Wearing and structural parts manufactured from metals, ***not*** plastic.
- Parts manufactured from ***stainless steel*** for superior durability.
- ***Serviceable*** by accredited (trained) Nozzle Repair Agents in most regions and countries.
- ***"Arctic"*** (cold temperature) models available for safe and reliable operation in extreme cold climates.
- High ***quality*** OEM fluid seals used in all dynamic sealing applications, not inexpensive O'Rings.
- Manufactured, assembled and factory ***tested*** in accordance with Banlaw's ISO9001 certification. Every nozzle is traceable by its serial code.
- Banlaw FuelTrack™ models available to support the ***automatic identification (auto ID)*** functionality of a Banlaw FuelTrack or ResTrack system – arguably the most ***secure*** fuels and resource management system of its kind available in the market.

Figure 4 illustrates the overall dimensions (millimetres, mm) of a Banlaw refuelling nozzle;

Conversion; 1mm ≈ 0.039”, i.e. 25.4mm = 1”.

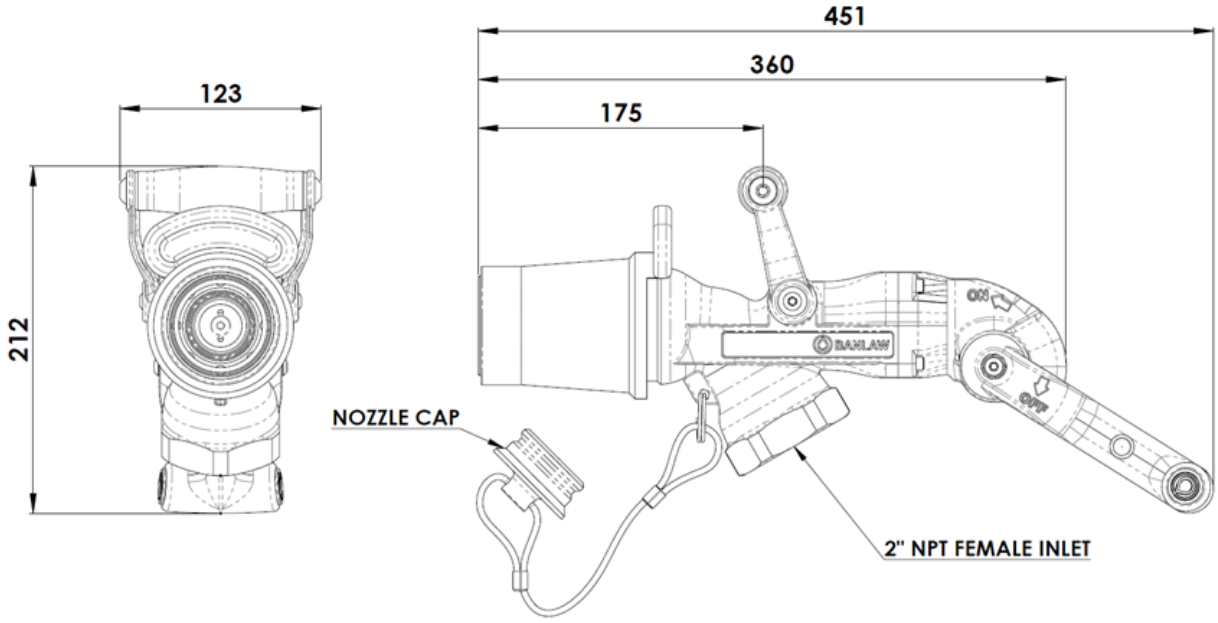

Figure 4 - Overall Dimensions of an 800 Series Banlaw Refuelling Nozzle

Figure 5 illustrates the key external features of a Banlaw refuelling nozzle.

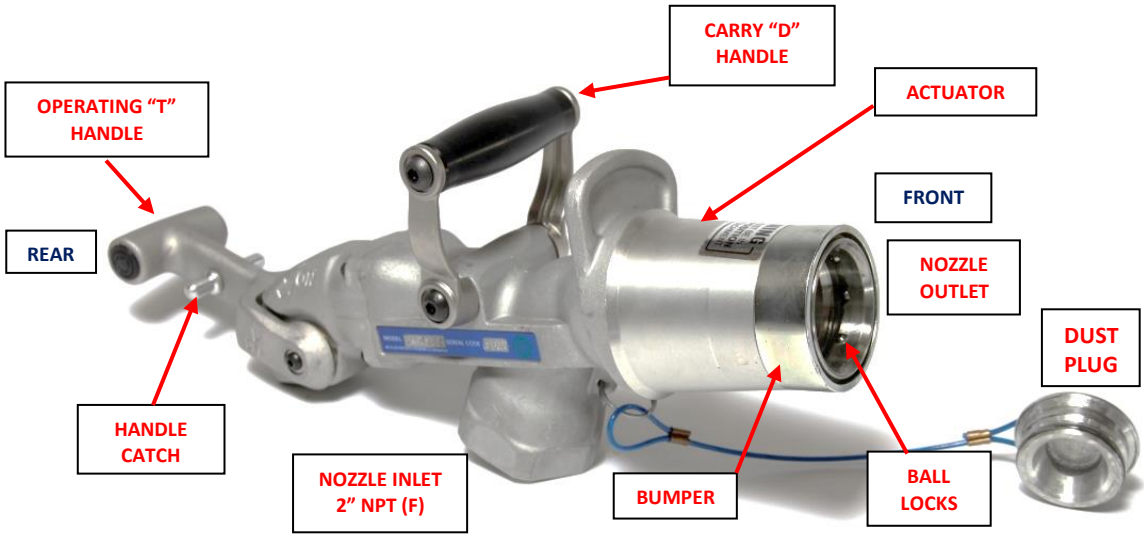

Figure 5 - Key External Features of Banlaw Nozzle

1.4 Part Numbering

Figure 6 and Figure 7 denotes the part numbering system used for Banlaw nozzles currently available. Earlier (superseded) Banlaw nozzles were assigned a different part number – if required, please contact Banlaw for details. Refer to section 1.6 for important information on Nozzle Spring Settings.

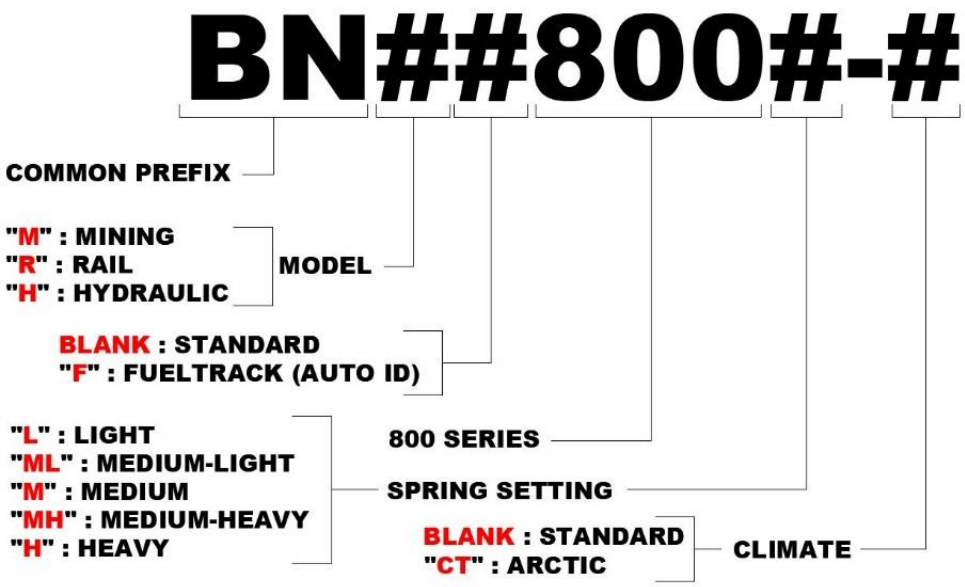

Figure 6 - 800 Series Nozzle Part Numbering

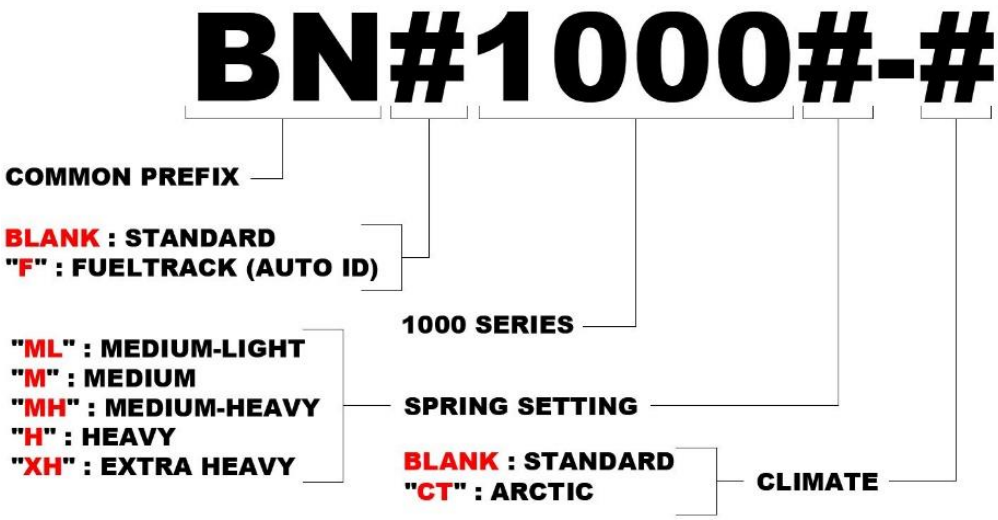

Figure 7 - 1000 Series Nozzle Part Numbering

1.5 Available Nozzle Models

The 800 Nozzle series currently consists of 12 different models, whilst the 1000 Nozzle series consists of 4 models – as per Table 1. **Please refer to Banlaw Sales & Marketing material for further details.**

800 Series		1000 Series	
Standard	**FuelTrack**	**Standard**	**FuelTrack**
BNM800	BNMF800	BN1000	BNF1000
BNM800-CT	BNMF800-CT	BN1000-CT	BNF1000-CT
BNR800	BNRF800		
BNR800-CT	BNRF800-CT		
BNH800	BNHF800		
BNH800-CT	BNHF800-CT		

Table 1 - Nozzle Models

NOTES: 1. Not all Models are available ex-stock and are made to order.

2. Each Model is available with select spring (i.e. shut-off pressure) settings. **Not every spring setting is available in each Model.**

3. Nozzle availability is subject to change – please refer to the Banlaw website or contact Banlaw or your nearest authorised Banlaw distributor for the most up to date details.

Figure 8 illustrates the location on a Nozzle where the model and unique serial code details are marked.

Figure 8 – Example of Model and Serial Details on Right Side of Nozzle

1.6 Nozzle Spring Settings

Each Nozzle is available with a **pre-set** spring setting, specifically the setting (specification) of the piston spring. Banlaw document **EBL-33** provides further important information on spring settings.

CAUTION

Selection of the required Spring Setting should be performed prior to purchase of a Nozzle. **Any adjustment of the Spring Setting within a Nozzle must only be conducted by Banlaw or a Banlaw authorised Nozzle Repair Agent. The use of a Nozzle with an inappropriate Spring Setting is potentially unsafe, and likely to increase the risk level of hazards such as:**

- Overfilling of the tank(s).
- Internal over-pressurisation of the tank(s).
- Fuel spillage.
- Personal injury, fire, or explosion.

Please conduct Banlaw for information on Nozzle Spring Settings.

"IF IN DOUBT, ASK!"

Available spring settings are detailed within Table 2.

Shut-Off (Spring) Setting		Nozzle Series	
Setting	**Code/Marking**	**800 Series**	**1000 Series**
Light	L	✓	✗
Medium-Light	ML	✓	✓
Medium	M	✓	✓
Medium-Heavy	MH	✓	✓
Heavy	H	✓	✓
Extra-Heavy	XH	✗	✓

Table 2 - Available Nozzle Shut-Off (Spring) Settings

Table 2 Legend: ✓ Yes (available) ✗ No (unavailable)

Figure 9 is a simplified diagram illustrating the interface between the nozzle and receiver during refuelling and the ***forces*** involved in opening or closing the nozzle.

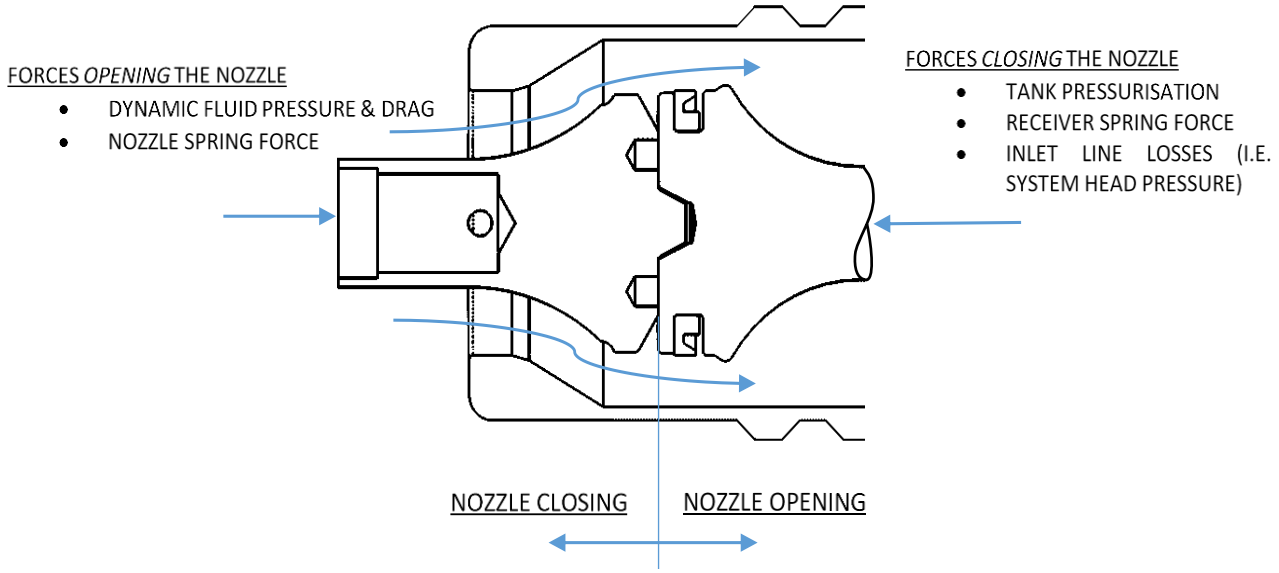

Figure 9 - Simplified General Arrangement of Nozzle and Receiver Interface

Figure 10 provides a basic illustration of the relationship between Nozzle and Receiver spring settings.

Figure 10 - Relationship Between Nozzle and Receiver Spring Settings

Figure 11 illustrates the location on a Nozzle where the Spring Setting is marked.

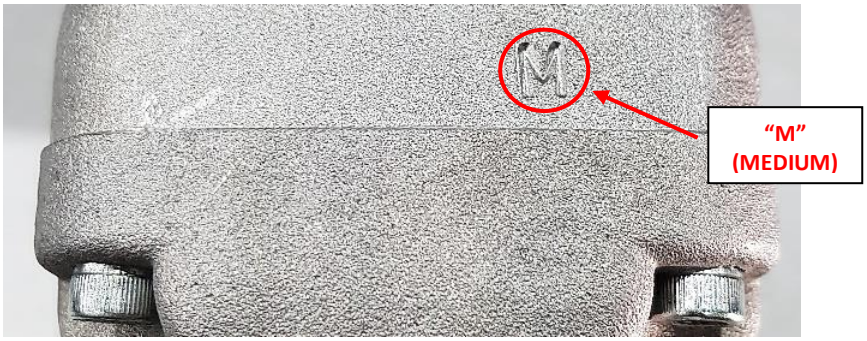

Figure 11 - Example of Spring Setting Marking on Top of Nozzle

For a given Nozzle spring setting, the effective (actual) liquid pressure at which the automatic shut-off mechanism of a Nozzle is activated is dependent on several factors, including;

- Spring setting of the Receiver onto which the Nozzle is connected.
- Make (OEM) of Receiver.
- Liquid flowrate.
- The working condition of the Nozzle, i.e. whether the Nozzle is operating within the applicable specifications for an "as new" (i.e. compliant) Nozzle.

Table 3 details the relationship between the various Nozzle settings, specifically with respect to the "Medium" (M) setting. I.e. the "offset" refers to the change in nozzle shut-off pressure from a Medium setting. This data only applies when the Banlaw Nozzle is used with a Banlaw Receiver and the Receiver spring setting remains unchanged. The data may be subject to change when a nozzle is used with a non-Banlaw (third party) receiver.

Nozzle Spring Setting	Code/Marking	Nozzle Shut-Off Pressure Offset (± 5 kPa)
Light	L	-40 kPa (5.8psi)
Medium-Light	ML	-20kPa (2.9psi)
Medium (Standard)	M	0 kPa
Medium-Heavy	MH	+10 kPa (1.5psi)
Heavy	H	+25 kPa (3.6psi)

Table 3 - Nozzle (Piston Spring) Shut-Off Settings

Examples;

- Adjusting the Nozzle spring setting from a Medium (M) to a Light (L) setting will ***decrease*** the shut-off pressure by 40 ± 5 kPa.
- Adjusting the Nozzle spring setting from a Medium (M) to a Heavy (H) setting will ***increase*** the shut-off pressure by 25 ± 5 kPa.

Please refer to the Product Data Sheet (PRH-REF-72) for information on Receiver spring settings.

Note:

Most refuelling applications utilising a Banlaw or similar Nozzle are accommodated using a **"Medium" (M)** spring setting, however growing use of larger plant equipment and higher refuelling flowrates is creating a requirement for *heavier* (higher) Nozzle spring settings. In addition, the use of non-metal (i.e. plastic, resin) fuel tanks are often best refilled using a lighter Nozzle spring setting. Please refer document EBL-33.

To provide the highest practicable level of protection, Banlaw recommends a suitable zero pressure overfill protection (OFP) system – e.g. Banlaw FillSafe™ is considered for all tanks.

1.7 FuelTrack Nozzle Variants

Figure 12 illustrates the basic architecture of the Banlaw FuelTrack dry-break auto ID system, specifically the Nozzle and Receiver in the 2 operating states;

- **Nozzle disconnected from Receiver;**
  - 4.6 to 5Vdc at the centre contact of the ***Nozzle***.
  - Receiver is passive.
  - No auto ID circuit.
- **Nozzle connected to Receiver;**
  - Auto ID circuit energised between Nozzle and Receiver.
  - Circuit "reads" unique ID tag (code) of Receiver. The Signal from the auto ID circuit is transmitted through the active data cable and is Received and processed by the Local Controller (i.e. "Depot").

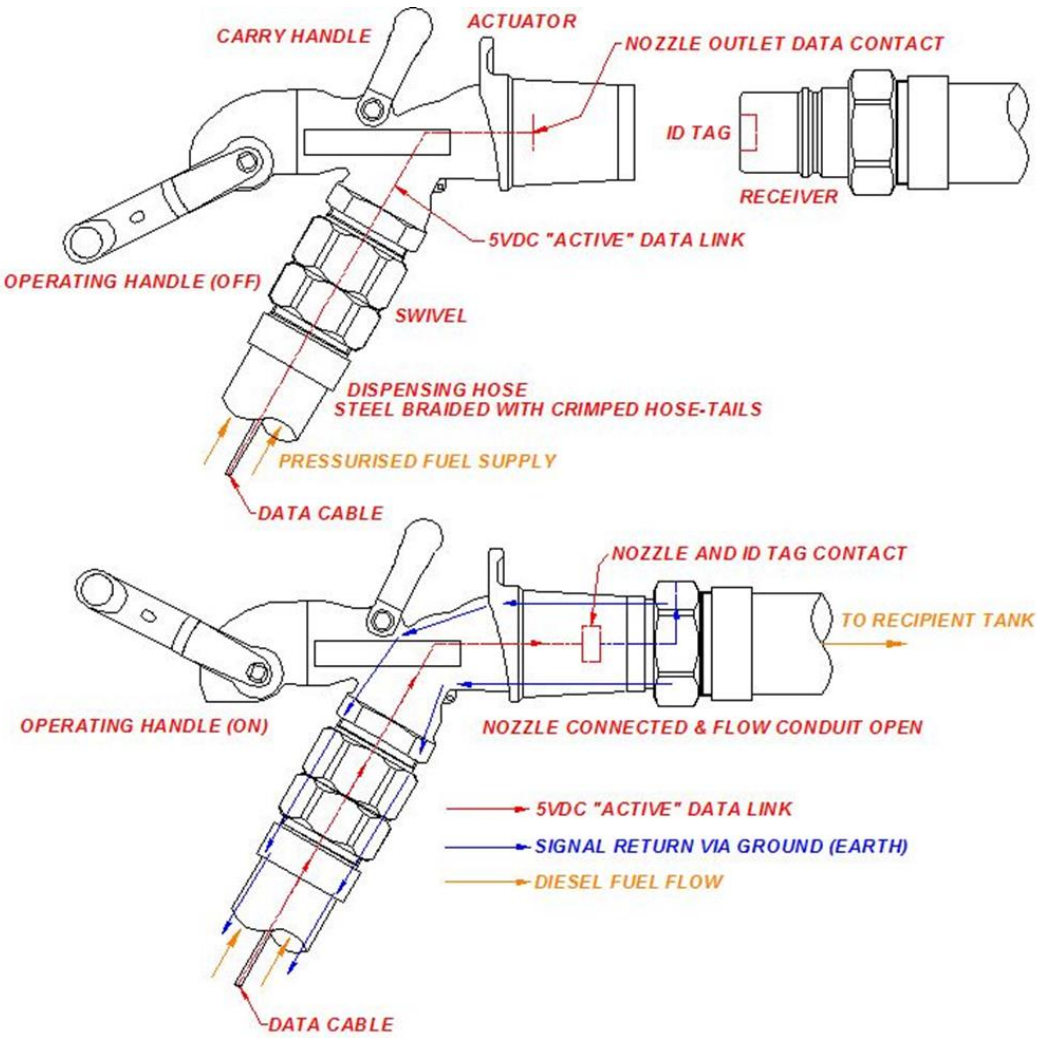

Figure 12 - Basic Operation of the Banlaw Dry-Break Auto ID System

1.8 Nozzle and Receiver Compatibility

Table 4 details the cross-compatibility of Banlaw Nozzles and the various Receivers available.

BANLAW NOZZLE & RECEIVER COMPATIBILITY	
Nozzles Series	**Receivers Series**
Banlaw 800 "Mining"	Banlaw 23 "Mining" Wiggins ZN2, JNC2, JNX, etc. Caterpillar FloMAX International FR, FRA, FRS, etc. Fast Fill Systems R150, R150CV, etc. # See also Note 1 (below)
Banlaw FuelTrack 800 "Mining"	Banlaw FuelTrack 23 "Mining" # See also Note 2 (below)
Banlaw 800 "Rail"	Banlaw 23 "Rail"
Banlaw FuelTrack 800 "Rail"	Banlaw FuelTrack 23 "Rail"
Banlaw 800 "Hydraulic"	Banlaw 23 "Hydraulic"
Banlaw FuelTrack 800 "Hydraulic"	Banlaw FuelTrack 23 "Hydraulic"
Banlaw 1000	Banlaw 43
Banlaw FuelTrack 1000	Banlaw FuelTrack 43

Table 4 - Banlaw Nozzle and Receiver Compatibility

NOTES: 1. Receiver OEM's and Part Numbers subject to change. Banlaw 800 "Mining" series Nozzles will also suit Receivers of the same type (basic design) manufactured by OEM's not listed.

2. Banlaw FuelTrack 800 "Mining" series Nozzles will suit Receivers compatible with the Banlaw 800 "Mining" series Nozzles, however the automatic identification (auto ID) feature of the FuelTrack (or Banlaw ResTrack) system will be inoperable.

3. The use of a Nozzle and Receiver combination deemed as incompatible is not condoned by Banlaw and will create potentially serious safety and environmental hazards.

4. Applications where a Banlaw Nozzle is used with a non-Banlaw (i.e. third party) Receiver will be subject to (i.e. governed by) specifications contrary to those of the Banlaw Nozzle – as per section 3. In **all** such cases;

a. *Minimum* specification (lower threshold or limit); the *highest* specification nominated by Banlaw or the Receiver OEM shall apply.
b. *Maximum* specification (upper threshold or limit); the *lowest* specification nominated by Banlaw or the Receiver OEM shall apply.

2 IMPORTANT RESTRICTIONS ON THE USE OF THIS PRODUCT

1. The safe installation and subsequent operation of a Banlaw product relies on the completion of all necessary ***"due diligences"*** for the assessment of the Banlaw product(s) being suitable for the intended application(s). Such an assessment is best achieved through the cooperation of the supplier/OEM (Banlaw) and the customer or end-user. Once such an assessment deems the Banlaw product(s) to be suitable, the customer or end-user shall ensure effective ***"change management"*** applies should any prominent or influential aspect of the application (upon which the initial assessment was based) be subject to change and may affect the ongoing suitability (i.e. safety and proper function) of the Banlaw product.
2. These Banlaw Dry-Break Refuelling Nozzles incorporate external and internal components manufactured from **aluminium**. Products containing **external (exposed) aluminium** are typically unsuitable for use within an underground coal mine, or otherwise within an area where the use of external aluminium components (or other materials within the product) are prohibited for use in such areas in accordance with applicable governances.

1. During October 2010 Banlaw conducted a self-assessment (Banlaw document EBL-19) of the Banlaw dry-break diesel refuelling Nozzles (and mating Banlaw Receivers) under the requirements of the European Union (EU) Pressure Equipment Directive (PED) 97/23/EC. The outcome of this assessment was that these products do not require the CE mark when used in accordance with the Banlaw product specifications. Unless noted otherwise by Banlaw, this product has *not* been assessed under any other Regulatory or Industry Standard, Code, Directive, Guideline or other governance which may apply to the use of this product in applications where a governance applies. Please consult Banlaw prior to installation if in doubt.
2. Please refer to Table 4 for details of ***compatibility*** of Banlaw Nozzles with Banlaw and non-Banlaw Receivers. The use of a Nozzle and Receiver combination

deemed as incompatible is not condoned by Banlaw and will create potentially serious safety and environmental hazards.

3. Banlaw Dry-Break Refuelling Nozzles are designed and tested for use with ***clean*** (i.e. filtered) automotive grade diesel fuels, including commercial bio-diesel blends. This Banlaw product is *not* recommended for use with waste diesel fuel, or with diesel fuel containing contamination levels beyond those stipulated by governances and guidelines such as the current Worldwide Fuel Charter (WWFC) and fuel quality requirements of modern diesel engine manufacturers. *The use of this product with fuel of higher contamination levels may cause the improper operation (failure) of the product and other detrimental effects.* Banlaw recommends adequate fuel contamination controls (e.g. filtration) for all fuels passing through a Banlaw Nozzle;
    a. The use of a Banlaw Nozzle with an alternate liquid type – e.g. a light oil – may be conditionally acceptable ***after*** consultation with Banlaw.
    b. Banlaw "Hydraulic" Nozzles (i.e. BNH800 series) have traditionally been used with solcenic oils without incident.
4. Banlaw Nozzles are *not* recommended for use with AdBlue, corrosive, oxidizing, acids, alkaline, solvents, flammable, explosive or gaseous (compressible) fluids or with an alternative fluid (or substance) whose properties may affect the safety, function or reliability of the product.
5. Specifically, for *"Arctic"* series Nozzles, noticeable physical changes (e.g. clouding, additive drop-out, agglomeration, thickening, etc.) in the diesel fuel passing through a Nozzle may cause reduced functionality of the Nozzle (and associated Refuelling system).

3 PRODUCT SPECIFICATIONS

BANLAW 800 MODEL NOZZLES	
Max. Diesel Flow Rate LPM (GPM)	800LPM (211GPM)
Min. Flow Rate LPM (GPM)	90LPM (24GPM)
Operating Temp. Range °C (°F)	-10°C (14 °F) to 55°C (131°F) *"Arctic"* (-CT) series; -51°C (-60°F) to 55°C (131°F)
Max. Internal SWP kPa (psi)	Non-FuelTrack Nozzles: 2,000kPa (290psi) FuelTrack Nozzles: 1,000kPa (145psi)
Compatible Fluid Types	***Clean*** (filtered) Automotive Diesel Fuels, incl. Bio-Diesel Blends. Refer also section 2.
Principal Material Composition	Aluminium, Brass, Stainless Steel, Zinc Plated Steel, Viton®, Nitrile (NBR), Acetal, Fluorosilicone, Nylon
Process Connection (Inlet)	2" NPT (F)
Mass of Nozzle (approx.)	3.9kg (8.6lb)

BANLAW 1000 MODEL NOZZLES	
Max. Diesel Flow Rate LPM (GPM)	1,000LPM (264GPM)
Min. Flow Rate LPM (GPM)	400LPM (106GPM)
Operating Temp. Range °C (°F)	-10°C (14 °F) to 55°C (131°F) *"Arctic"* (-CT) series; -51°C (-60°F) to 55°C (131°F)
Max. Internal SWP kPa (psi)	Non-FuelTrack Nozzles: 2,000kPa (290psi) FuelTrack Nozzles: 1,000kPa (145psi)
Compatible Fluid Types	***Clean*** (filtered) Automotive Diesel Fuels, incl. Bio-Diesel Blends Refer also section 2.
Principal Material Composition	Aluminium, Brass, Stainless Steel, Zinc Plated Steel, Viton®, Nitrile (NBR), Acetal, Fluorosilicone, Nylon
Process Connection (Inlet)	2" NPT (F)
Mass of Nozzle (approx.)	4.2kg (9.3lb)

Legend: **"SWP";** Maximum recommended Safe Working Pressure
"LPM"; Litres per minute (volumetric flowrate)
"GPM"; US Gallons per minute (volumetric flowrate)
"Max."; Maximum (upper limit)
"Min."; Minimum (lower limit)

Notes: 1. All pressure data refers to the ***internal*** fluid pressure, where each product is in "as new" condition.
2. The core function of *"Arctic"* (CT) series Nozzles (and Banlaw Receivers) has been tested in an independent laboratory at -51°C (-60°F) under the guidelines of MIL-STD-810G. These Nozzles are fitted with fluid seals rated for operation below -60°C (-76°F).

3.1 Nozzle Flow Performance

Figure 13 illustrates the dynamic pressure drop (i.e. fluid head loss) through a Banlaw 800 model Nozzle and Banlaw 23 model Receiver – refer also Notes below.

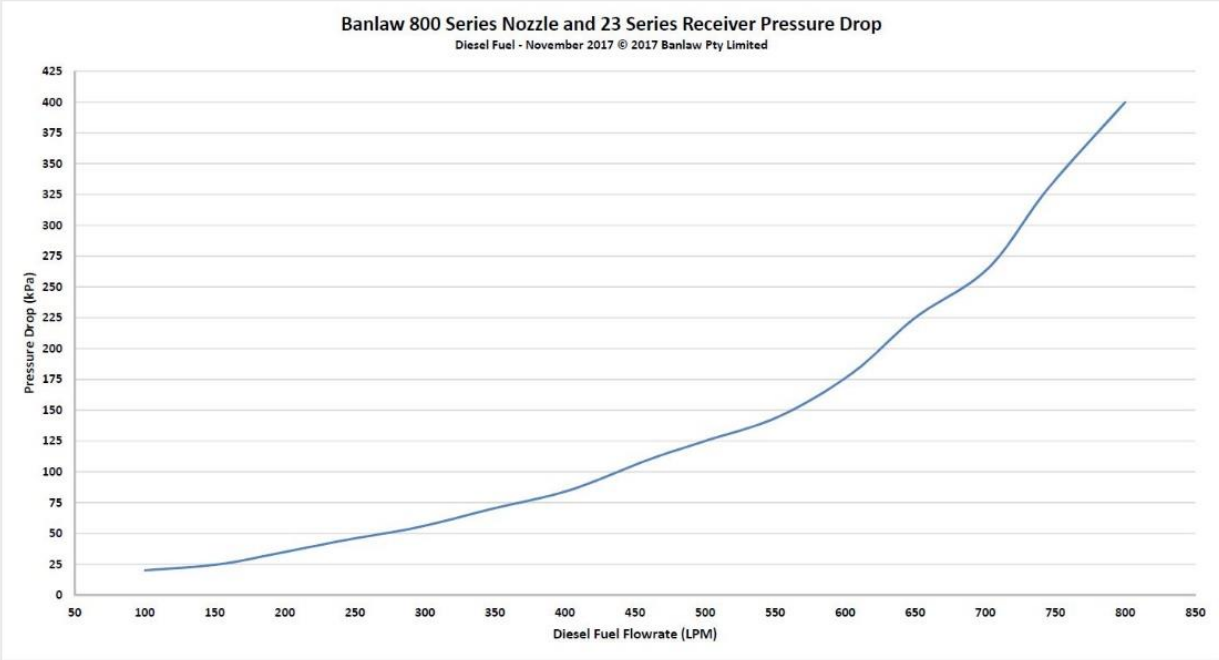

Figure 13 - Pressure Drop Through 800 Nozzle and 23 Receiver

Figure 14 illustrates the dynamic pressure drop (i.e. fluid head loss) through a Banlaw 1000 model Nozzle and Banlaw 43 model Receiver – refer also Notes below.

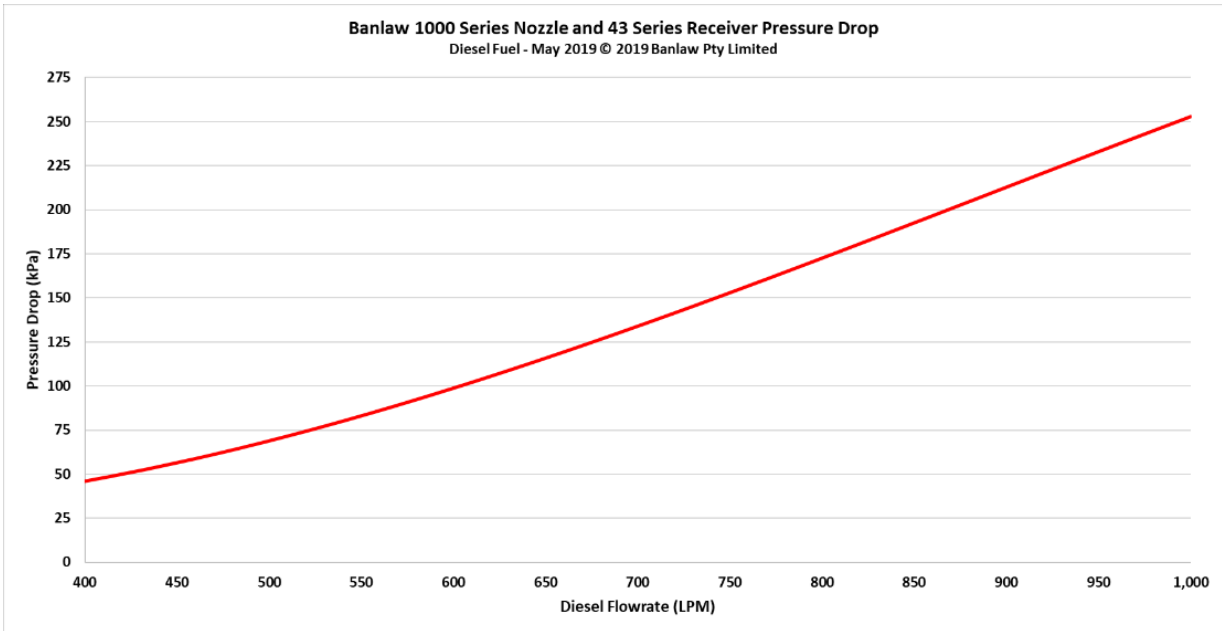

Figure 14 - Pressure Drop Through 1000 Nozzle and 43 Receiver

Notes: 1. All pressure drop data refers to the dynamic head loss through the Banlaw Nozzle and Banlaw Receiver combination. This data will vary when a Banlaw Nozzle is used with a non-Banlaw Receiver.

2. All data obtained using automotive grade ***diesel fuel*** at approx. 25°C (77°F). If comparing this Banlaw data with other Nozzle OEM pressure drop data, ensure the fluid properties (density and viscosity) are comparable with diesel fuel.

3. Data measured by flowrate and pressure measurement equipment calibrated in accordance with Banlaw's ISO 9001 certification.

4 INSTALLATION & COMMISSIONING GUIDELINES

This Installation & Commissioning Guide is general and is not meant to replace or override installation guidelines that arise out of a *due diligence* assessment of a Banlaw product for a specific (intended) application.

The scope of this section applies to this Nozzle, e.g. BNM800M, etc. Where other products are mentioned – e.g. Receivers, Swivels, Break-Away Valves – end-users must refer to ***separate*** Banlaw documentation covering each product *prior* to their installation.

4.1 Pre-Installation Guidelines

CAUTION

- Any proposed installation/application/operation of the Banlaw Nozzle shall satisfy the Specifications detailed in section 3, and other requirements within this document. As diesel refuelling is typically conducted at elevated pressure and flowrates, the specifications for any other parts & equipment included within this install must also comply with the parameters (e.g. pressure, temperature, flowrate, etc.) of the application. ***Failure to ensure the Nozzle and other equipment are used strictly in accordance with their applicable specifications will introduce potentially serious safety hazards.***
- **Ensure a Nozzle with the correct Shut-Off Setting (refer section 1.6) is being installed.** Failure to select the proper nozzle setting will increase the risk of hazards such as;
    - Overfilling and the likely internal over-pressurisation of the tank(s).
    - Spillage of fuel, environmental damage, or fire.
    - Premature shut-off of the Nozzle, i.e. automatic shut-off of the Nozzle before the tank is filled.
- This Product shall only be used by ***competent persons***, trained and/or directly supervised in their safe and proper operation.
- The Nozzle and all other diesel dispensing and refuelling system pressure equipment ***shall be rated for the process conditions***, i.e. pressure, flowrate and temperature. **In the event of a "drive-away" all components – i.e. the Nozzle, Receiver, tank inlet and diesel dispensing system - shall be subjected to abnormally high structural load (forces) which may cause catastrophic failure of equipment within the system and potentially serious health, safety and environmental hazards.** The consequences of a drive-away can be reduced using a sacrificial mechanical link within the system, e.g. a Banlaw Break-Away Valve.

4.1.1 Nozzle – Ergonomics

CAUTION

When designing the refuelling system, the ***ergonomics*** of the nozzle operation must be considered to avoid potentially serious work health & safety (WHS) hazards. An assessment of the physical handling of the Nozzle for ***each*** intended application must be part of a pre-installation due diligence assessment. Key manual handling tasks include;

- Carrying the Nozzle and attached fuel supply line to and from the Nozzle storage point (e.g. Nozzle Holster) and the Receiver onboard the plant equipment.

- Connection and disconnection of the Nozzle and Receiver, particularly at extended reach.
- Actuation of the Nozzle operating handle, particularly at extended reach.

Additionally, to prevent damage and contaminant ingress, Nozzles should not be dragged on the ground. This type of Nozzle abuse is particularly common in applications that incorporate hose reels with an automatic rewind function.

The use of a Banlaw ***Swivel*** at the Nozzle inlet is recommended to improve ergonomics, specifically to reduce the degree of twist transferred to the Nozzle from the attached supply hose – refer Figure 15.

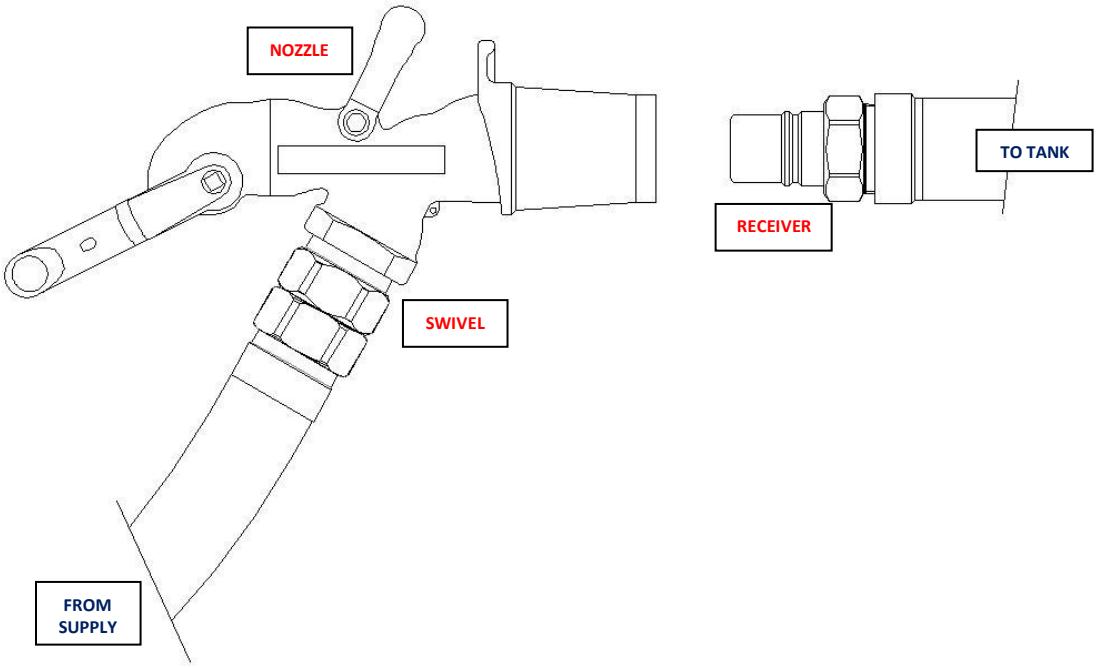

Figure 15 – Basic Nozzle and Receiver Arrangement

Note:

- The Nozzle must be aligned ***concentrically*** with the Receiver for connection.
- The Nozzle may be oriented at ***any angle*** during operation – i.e. when connected to the Receiver.
- To improve ease of use (ergonomics);
  - If the Receiver is installed at a height ***above*** (human) chest height (i.e. above approx. 1.2m, 4'), end-users may benefit from the installation of the Receiver in a ***downwards*** orientation – as per Figure 16.
  - If the Receiver is installed at a height ***below*** (human) waist height (i.e. below approx. 0.9m, 3'), end-users may benefit from the installation of the Receiver in an ***upwards*** orientation – as per Figure 17.
- The ***overall weight*** of the Nozzle and attached hose and fittings should be ***minimised***. This objective is aided by avoiding the use of excessive fittings between the hose outlet and nozzle inlet. The hose outlet should be configured to attach directly into the Swivel inlet.

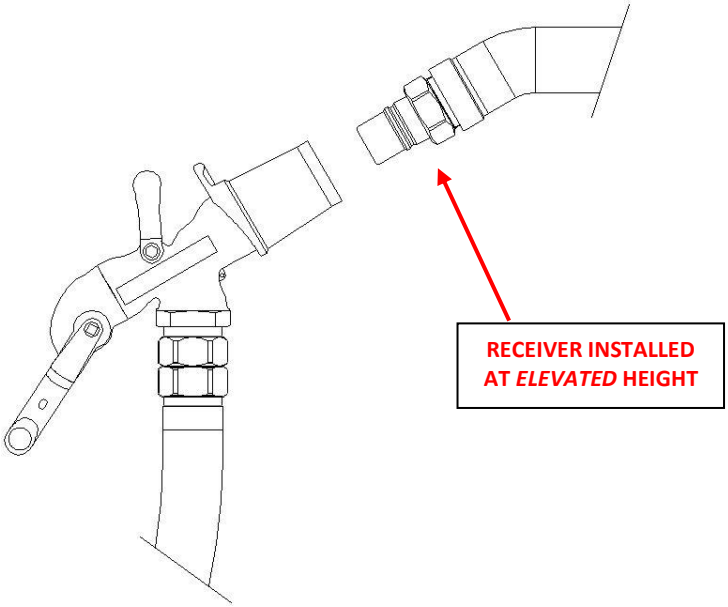

Figure 16 - Angled (Down) Orientation of Receiver

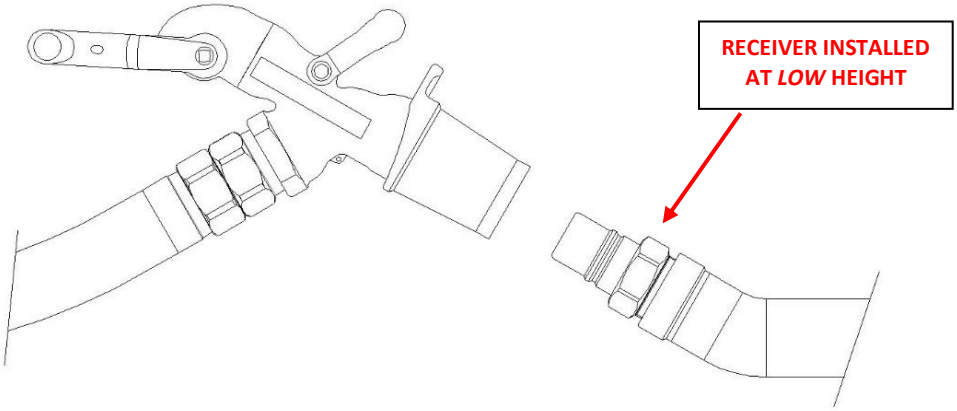

Figure 17 - Angled (Up) Orientation of Receiver

4.1.2 Nozzle – Storage

A secure means of storing the Nozzle when not in use must be provided to avoid situations where the Nozzle is left lying on the ground, increasing the risk of contamination ingress into the Nozzle and a potential trip hazard to personnel. This can be accomplished by installing a **Banlaw Nozzle Holster or Nozzle Anchor** or by fabricating a custom bracket to safely store the Nozzle. The location of the holster etc. shall allow safe, convenient and ergonomic access by personnel, and provide a means of stowing the nozzle and dispensing hose in a safe location out of pedestrian and vehicle thoroughfares.

Additionally, use of a dedicated storage point be interlocked with additional safety systems to prevent vehicle driveaway while the nozzle is still connected.

Figure 18 illustrates the use of a ("tall") Banlaw Nozzle Holster. "Short" holsters (i.e. without the stand) are also available for mounting onto existing raised platforms and for use on service trucks etc.

Note:

A dedicated means of securely storing a Nozzle off the ground provides several key benefits, including;

- Minimises the ingress of contamination (dust, water, etc.) into the Nozzle - maximising the service life of the Nozzle.
- Minimises the risk of the Nozzle being struck or run over by vehicles in the same area. Bollards or barriers around the area will also assist.
- Minimises trip hazards.
- Can be interlocked with additional safety features to prevent vehicle "driveaway".

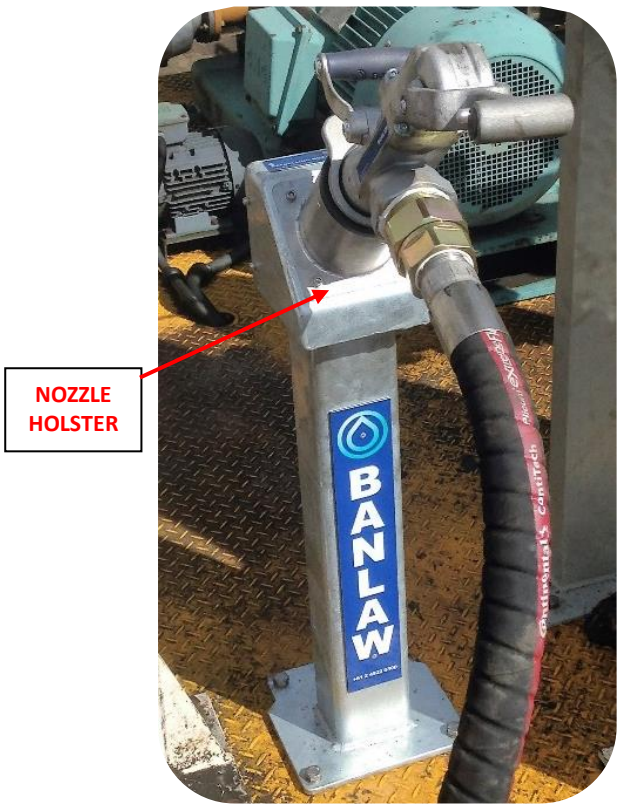

Figure 18 - Nozzle Stored in Nozzle Holster

4.2 Installation Guidelines

Note:

General Installation Notes;

1. Conduct a **Job Hazard Analysis** (JHA) ***prior*** to install to mitigate health, environmental and equipment hazards.
2. Do ***NOT*** install any parts that are damaged or are otherwise faulty.
3. Do ***NOT*** install parts which are not compatible with mating parts or parts which do not satisfy the specifications of the system.
4. Conduct all necessary measures to ***prevent the ingress of contamination*** into the Banlaw Nozzle and other components.
5. Only engage threads of the same thread type. Ensure all threaded connections are clean and in good condition. Avoid over-tightening.
6. An appropriate thread sealant is recommended on the 2" NPT (F) process connection (inlet) of the Nozzle. Use ***sparingly*** and avoid excess use of Loctite

and similar products – *residual thread sealants etc. may cause contamination and malfunction of the Nozzle*.

7. Use only proper ***hand tools*** for the installation of all components. Avoid the use of power or impact tools, and adjustable wrenches (e.g. stilsons).
8. Use consumables (e.g. Loctite products) strictly in accordance with the OEM Safety Data Sheet (SDS) and operating guidelines. Do not use consumables beyond their expiry date.

Damage to the cast housing of the Nozzle can occur if the 2" NPT (M) fitting (i.e. Swivel outlet) is over-tightened into the Nozzle inlet. With appropriate thread sealant, **the 2" NPT threaded connection should be tightened to approximately 1.5 to 2 turns (i.e. 5mm, 13/64") *past* hand-tight engagement**. I.e. NPT threads are tightened according to the length of thread engagement, not a torque.

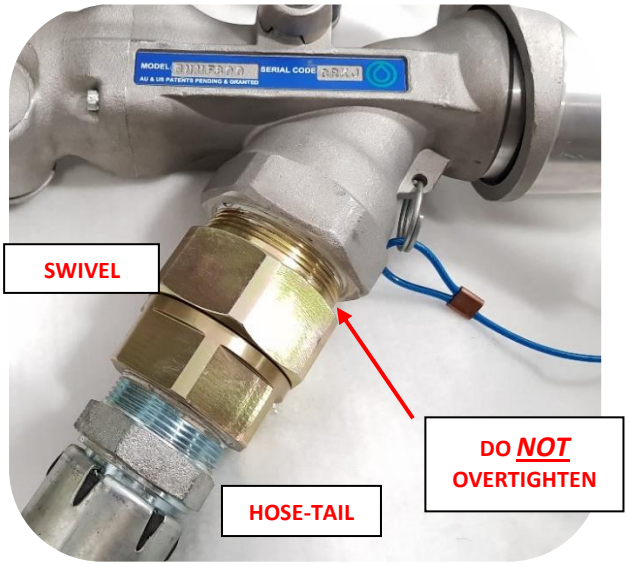

Figure 19 - Nozzle Inlet Connected

4.2.1 Banlaw FuelTrack Nozzles

This section applies to installation requirements specifically for FuelTrack series Nozzles – e.g. **BNMF800** and **BNF1000** series. During connection of the Swivel – refer section 4.2 - it is imperative ***the spring-loaded "male" probe extending from the Swivel outlet is inserted into the "female" probe within the Nozzle inlet***.

Figure 20 shows the auto ID circuit components (i.e. hard links) connecting the FuelTrack Swivel to the FuelTrack Nozzle inlet.

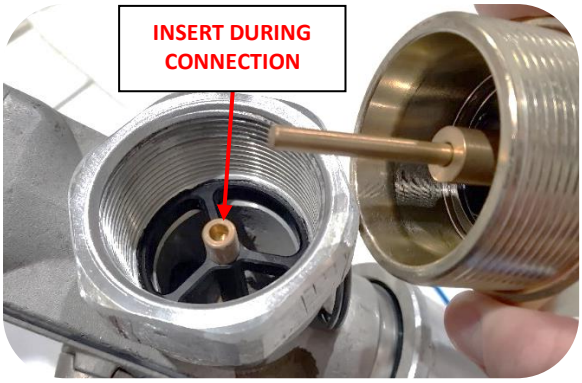

Figure 20 - Swivel Outlet and Nozzle Inlet

Once the Swivel is secured into the Nozzle, the auto ID circuit voltage available at the Nozzle outlet must be tested using a voltmeter (or multi-meter) as per Figure 21. This test also establishes any short circuit within the Nozzle or auto ID circuit. The positive (+) terminal is placed onto the metal Retainer at the centre of the Nozzle outlet, and the negative (-) terminal is placed onto the exterior of the Swivel. **The voltage must be 4.6 to 5.0 Vdc**. A lower voltage indicates excessive electrical resistance (i.e. low conductivity) in the circuit – refer section 7. A lack of voltage (i.e. 0Vdc) indicates either the circuit is isolated (de-energised) or a short circuit – refer section 7.

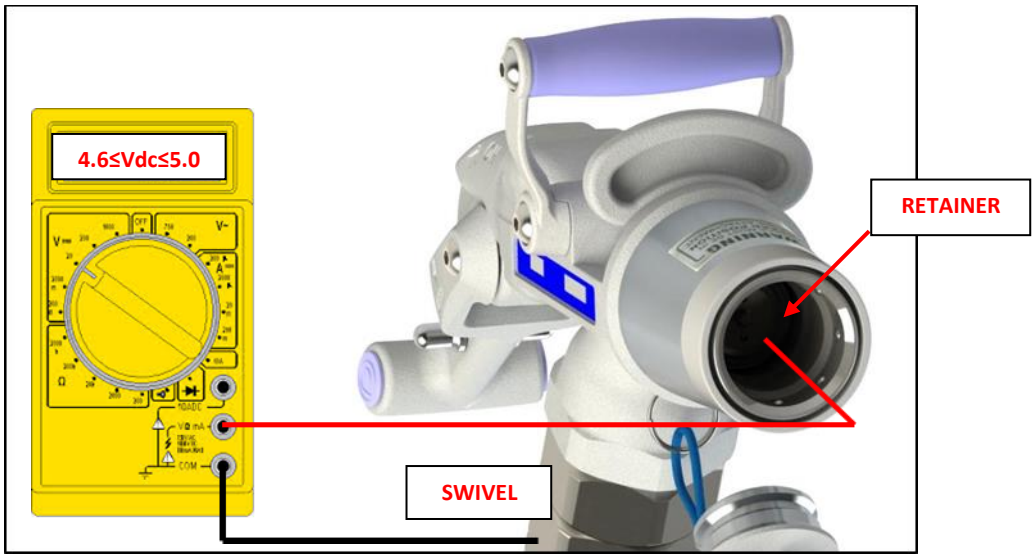

Figure 21 - Testing for Voltage and Short Circuit

4.3 Commissioning Guidelines

There are no specific commissioning requirements for a Banlaw Nozzle. Banlaw do however recommend witnessing tank pressures and system performance during the initial refuelling process of each unique refuelling configuration. It is especially beneficial to confirm system performance when a new nozzle is installed, or existing refuelling system components are modified. These checks provide confirmation that the system is configured correctly and operating within safe working parameters.

Confirmation of initial system performance will help prevent premature nozzle shut off and tank overfill. Additionally, these checks ensure that operators do not need to manually override the shut-off mechanism of the nozzle or are conducting other improper operating practices,

The incidence of operators who manually override the automatic tank pressure shut off function of Banlaw Nozzles by holding the nozzle in the open position is a principal indication that the system is not configured properly or being maintained sufficiently.

5 PRINCIPLES OF OPERATION

CAUTION

- **A Banlaw Nozzle shall only be used by trained personnel, deemed competent in its proper operation.** The operation of a Nozzle by untrained persons introduces potentially serious health and safety risks.
- **A Banlaw Nozzle must only be operated in accordance with Banlaw procedures.**
- Any incidents or problems involving the operation of the Nozzle – and the dry-break refuelling system – should be promptly reported and investigated.
- Equipment that is damaged, leaking or otherwise unfit for operation must not be used, but must instead be replaced or repaired prior to use of a diesel refuelling system.
- **It is recommended the refuelling event is monitored (supervised).** In the event of a system malfunction or other incident, this will allow personnel to react promptly to avoid further escalation of the hazards.

WARNING DANGER

The use of a splash-fill adaptor (refer Figure 22) with a dry-break refuelling nozzle introduces additional hazards and risk. ***Persons must not use such an adaptor without being trained on the additional safe operating requirements for this task.***

Banlaw Recommends ***"Designing Out"*** the requirement to refuel with such Splash-fill adaptors wherever possible. Please refer to Banlaw document BPA-27 for further information.

Figure 22 - Example of a Splash-Fill Adaptor

Refuelling couplings, e.g. nozzle and receiver, that are contaminated with dust and other build-up ***must be cleaned prior to use***. This will help prevent;

- Contamination entering the system, subsequently increasing the probability of system failure.
- Contamination from entering the fuel stream, increasing the probability of engine fuel system problems.
- Accelerated wear & tear of mating parts.
- Damage to fluid seals, creating fuel leakage.
- Difficulty in properly engaging/connecting the nozzle and receiver.

The following list illustrates a typical operating sequence for a dry-break system refuelling system comprising a Banlaw Nozzle. **Fuel spillage should not occur during refilling of the tank(s),** whether by tank overfill or other causes.

1. **IF A TANK LEVEL GAUGE EXISTS, FIRST DETERMINE WHETHER THE TANK(S) REQUIRES REFILLING (I.E. FUEL LEVEL IS BELOW THE SAFE FILL LEVEL).**

2. **ENSURE NOZZLE OPERATING HANDLE IS SECURELY LATCHED IN THE "OFF" (CLOSED) POSITION REMOVE NOZZLE FROM ANCHOR OR HOLSTER. REMOVE RECEIVER DUST CAP.**

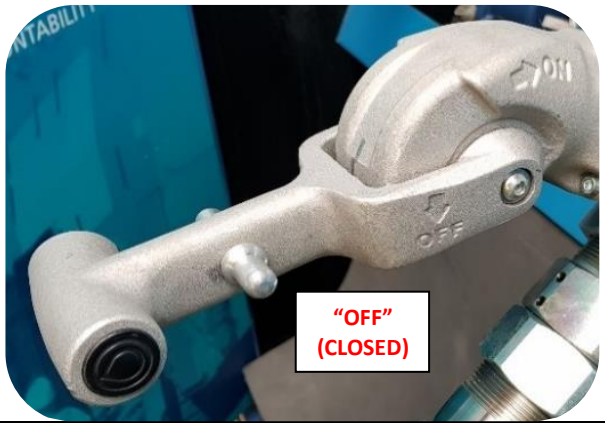

3. **NOZZLE DISCONNECTED FROM RECEIVER.**

4. **RETRACT NOZZLE ACTUATOR AND PUSH ONTO RECEIVER.**

   NOZZLE AWAITING CONNECTION - ACTUATOR *RETRACTED.*

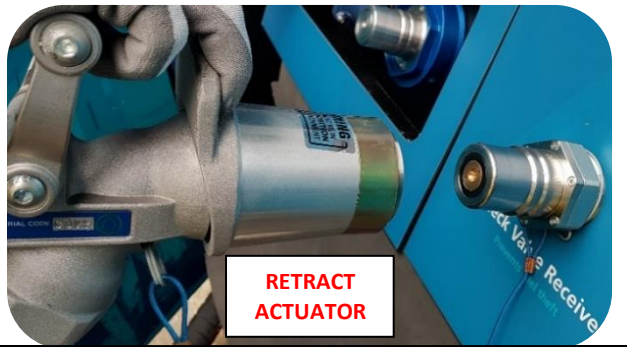

5. **CONNECT NOZZLE AND RECEIVER - ACTUATOR *STILL RETRACTED.***

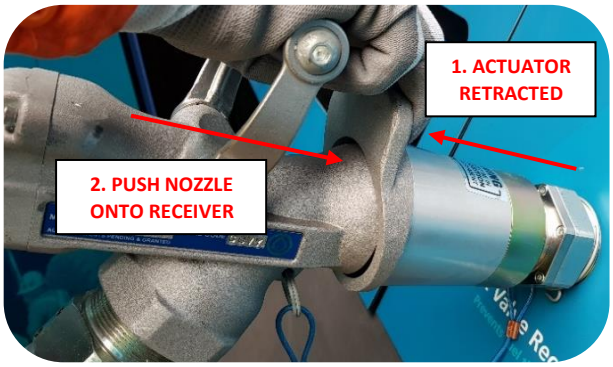

6

NOZZLE AND RECEIVER CONNECTED - ACTUATOR ***RELEASED & FORWARD.*** RELEASE ACTUATOR AND ALLOW IT TO RETURN FORWARD. PULL BACK ON NOZZLE "D" HANDLE TO CONFIRM A SECURE CONNECTION WITH RECEIVER.

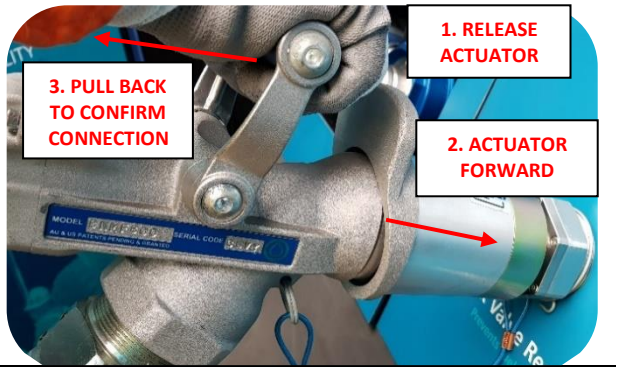

7

START FUEL DISPENSING PUMP

8

MANUALLY OPEN REFUELLING NOZZLE BY DISENGAGING T-HANDLE CATCH, THEN MOVE HANDLE INTO THE "ON" (OPEN) POSITION. IF NOZZLE IMMEDIATELY SHUTS OFF, MANUALLY CYCLE NOZZLE BETWEEN OPEN AND CLOSED FOR APPROX. 2-3SECS. IF NOZZLE WILL STILL NOT REMAIN OPEN, CONFIRM TANK IS NOT ALREADY FILLED TO CAPACITY. IF NOT, REFER SECTION 7.

DO NOT MANUALLY OR OTHERWISE FORCIBLY HOLD THE OPERATING HANDLE IN THE ON (OR PARTIALLY ON) POSITION!

9

UNLATCHING OPERATING HANDLE FROM ***OFF*** POSITION

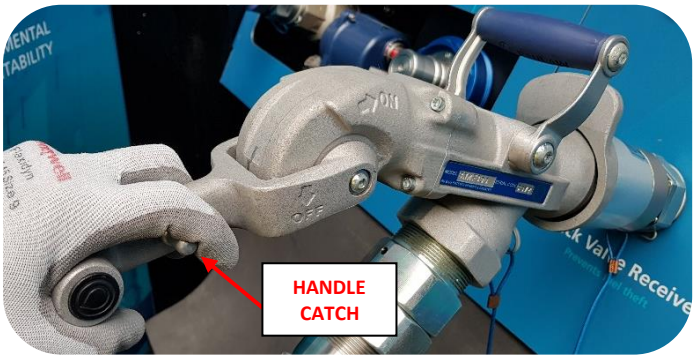

10

NOZZLE OPERATING HANDLE IN ***ON*** POSITION

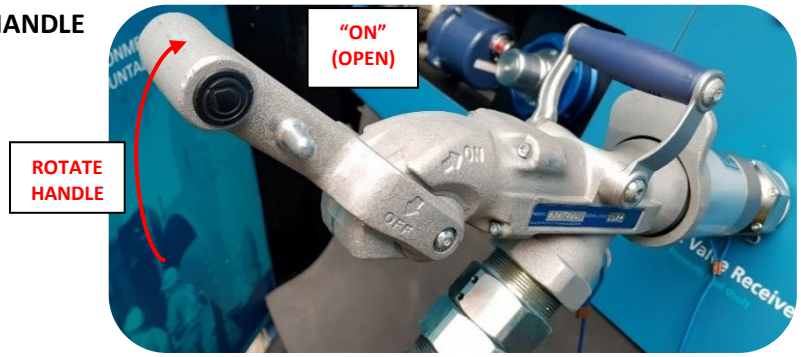

11

ALLOW TANK TO REFILL. IF POSSIBLE, VISUALLY MONITOR RISING FUEL LEVEL WITHIN TANK(S).

12

ONCE TANK REACHES CAPACITY, THE MEANS OF TANK OVERFILL PROTECTION (OFP) WILL TERMINATE THE INFLOW OF FUEL INTO THE TANK(S). ONCE THE DEGREE OF FUEL PRESSURE REACHES THE SHUT-OFF PRESSURE OF THE NOZZLE, THE NOZZLE WILL AUTOMATICALLY CLOSE. ***DO NOT REOPEN THE NOZZLE ONCE THE TANK IS FILLED!***

13 **ENSURE NOZZLE T-HANDLE CATCH IS LATCHED IN THE *"OFF"* (CLOSED) POSITION PRIOR TO DISCONNECTION.**

14 **STOP FUEL DISPENSING PUMP.**

15 **RETRACT NOZZLE ACTUATOR AND DISCONNECT FROM RECEIVER. DISCONNECTING NOZZLE AND RECEIVER - ACTUATOR *RETRACTED***

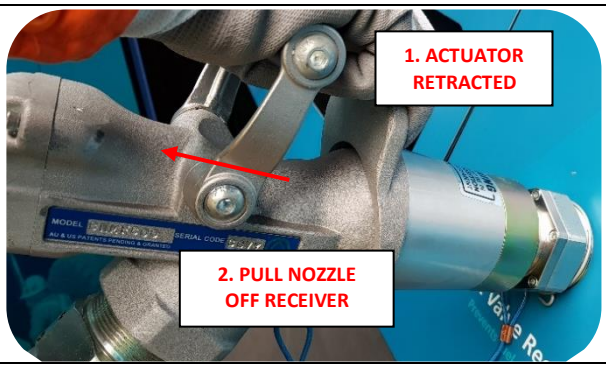

16 **REPLACE RECEIVER DUST CAP AND RETURN NOZZLE TO STORAGE HOLSTER/ANCHOR.**

Note:

The fluid flow path through a connected Nozzle *and* Receiver assembly is controlled by the operating handle (T-Handle) of the Nozzle. Whilst the operating handle is latched in the **OFF** position, the fluid path is **closed**. The flow path is **open** whenever the handle is not latched in the OFF position, and **fully open** when the handle is on the **ON** position. The fuel flow through the Nozzle and Receiver may be manually controlled by the operator. The Nozzle will automatically close once the internal fluid pressure reaches the shut-off pressure. The dry-break feature of the Nozzle will prevent the discharge of fuel from the Nozzle outlet irrespective of the position of the operating handle.

The list below is of common problems which may occur during the refuelling event. Each problem introduces risk and should not be tolerated, but promptly resolved – also refer section 7.

- Premature shut-off of the Nozzle – i.e. automatic shut-off (closure) of the Nozzle prior to the tank being filled to the required level. ***Premature shut-off can be resolved*** – for information contact Banlaw or refer to Banlaw document EBL-33.
- Refuelling operators who manually override the automatic tank pressure shut off function of Banlaw Nozzles by holding or using some device (i.e. O'ring) to maintain the nozzle in the open position – e.g. refer Figure 23.

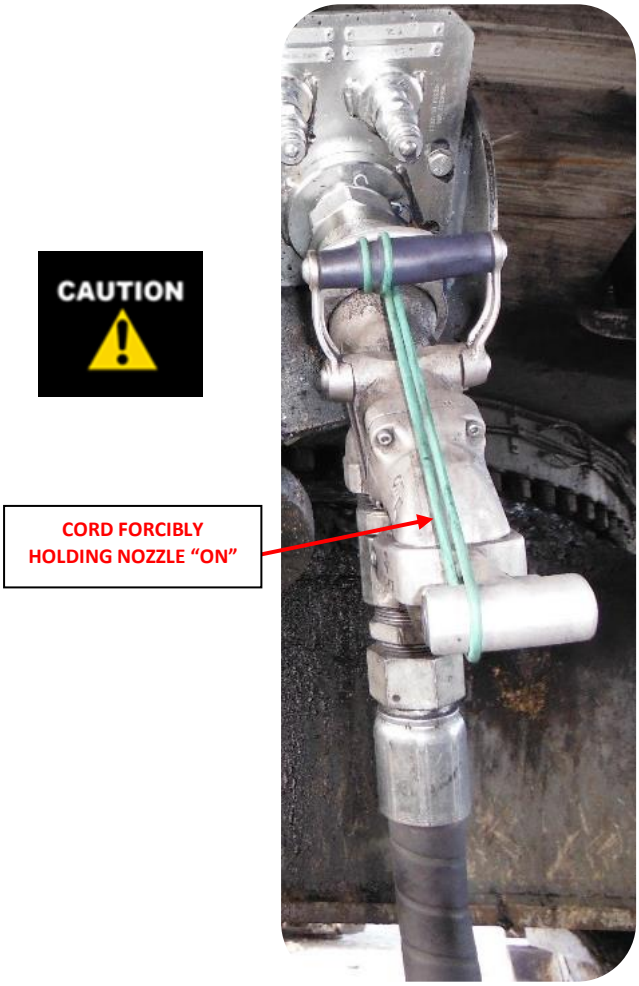

Figure 23 - Nozzle Forcibly Held "ON" (Open)

- Leakage of fuel from the Nozzle or from between the Nozzle and Receiver.
- Overfilling of the tank(s), and spillage of fuel to ground via the tank vent(s).
- Attempting to connect a Nozzle without its operating ("T") handle latched in the OFF (closed) position – operator training required.
- Personal injury due to poor ergonomics for Nozzle operation, e.g. difficulty connecting the Nozzle onto the Receiver.
- The unplanned (uncontrolled) disconnection of the Nozzle from the Receiver – i.e. Nozzle "fly off".
- A "drive-away" – i.e. movement of the plant equipment whilst the Nozzle remains connected.

6 MAINTENANCE & SPARE PARTS

Spare parts (including service kits) for Banlaw Nozzles are only sold to accredited Banlaw nozzle repairers. Accredited repairers are required to use only genuine Banlaw spare parts and have been trained by Banlaw on the safe and proper repair and ***testing*** of Banlaw Nozzles – please refer to the Banlaw website for a list of repairers near you.

CAUTION

No attempt to repair a Banlaw Nozzle shall be made by untrained personnel. The improper repair of a Banlaw Nozzle will create potentially serious health and safety risks if the Nozzle is used. **The Nozzle incorporates important safety features which will be jeopardised by improper repair, tampering, adjustment, or modification.** Persons performing such unauthorised activity do so at their own risk.

6.1 Preventative Maintenance

Banlaw Nozzles contain relative moving parts and fluid seals which will wear after a period of normal use. The effective working life of a Nozzle and associated refuelling equipment depend on many factors, particularly the environment in which they operate. Dusty and dirty environments more prone to contamination build-up in refuelling couplings and/or excessive contamination within the fuel stream will cause accelerated wear & tear. In addition, the use of high pressure washdown water, mineralised (hard) water, solvents and aggressive chemicals to clean a Nozzle will also cause damage and reduce the working life of the Nozzle. Due to the many varied operating environments in which Banlaw equipment is used, any preventative maintenance information provided within this document shall be used a guide – unless noted otherwise.

The front end of the Nozzle is more exposed to contamination ingress and general wear & tear, particularly if a Nozzle Anchor, Holster or Dust Plug is not used to store the Nozzle. Figure 24 illustrates the front end of a nozzle returned to Banlaw – as received (i.e. uncleaned) - for repair. Observe the contamination within this sensitive area of the Nozzle. Also noted are important areas and features of the nozzle which require regular inspection for damage and excessive wear.

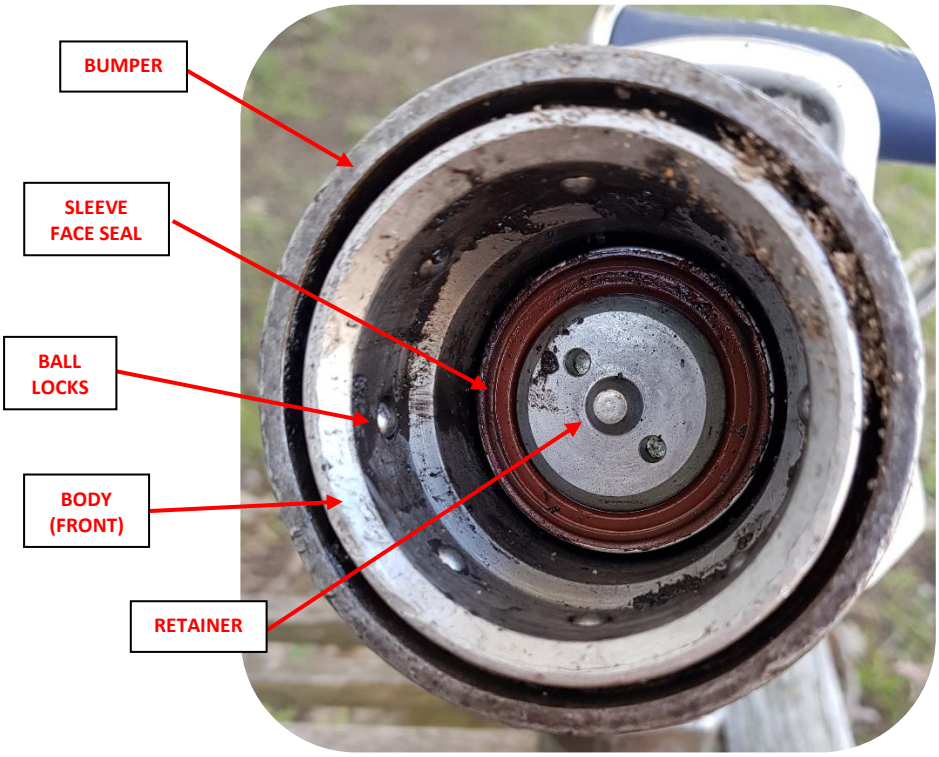

Figure 24 - Front End of Nozzle and Critical Items

CAUTION

A Nozzle which is damaged to the extent its safe use and proper operation may be jeopardised shall not be used, but instead promptly replaced and returned to Banlaw or an authorised Banlaw Nozzle Repair Agent for repair.

The following key preventative maintenance guidelines apply to Banlaw Nozzles & Receivers;

1. Ensure adequate engineering controls are maintained to prevent exposure of a Nozzle to elements (i.e. pressure, flowrate and temperature) outside of the Banlaw specifications (refer section 3). Such controls will include;
    a. Pressure relief for the supply line connected into a nozzle to mitigate over-pressurisation due to thermal expansion of the liquid (fuel).

   b. Fluid pressure spike (fluid hammer) controls.
   c. Shields, covers etc. to protect a Nozzle from high pressure washdown water – especially relevant on (mobile) service trucks.
2. Ensure adequate controls and condition monitoring are in place to ensure the contamination levels (and other specifications) of your fuel supply are maintained – ***PREVENT*** inferior quality fuel entering your site's fuel infrastructure and plant equipment.
3. As required, install inline (bulk) filtration on all diesel dispensing lines – contact Banlaw for advice.
4. Maintain the use of the Receiver Dust Cap and Nozzle Anchors, Holsters, or Dust Plugs.
5. Remove any contamination from the dry-break Receiver (front end) ***prior*** to connecting a Nozzle – refer contaminated Receiver in Figure 25.
6. Prior to each use;
   a. Visually inspect the Nozzle for excessive wear & tear, fuel leaks or damage.
   b. Visually inspect the Receiver for excessive wear & tear or damage. Third party (non Banlaw) Receivers manufactured from aluminium and plated steels are especially prone to corrosion and wear & tear – refer examples in Figure 26 and Figure 27. Damaged Receivers should not be used, as the risk of hazards such as fuel leakage and nozzle "fly off" are increased.

Figure 25 - Contaminated Receiver - No Dust Cap Fitted

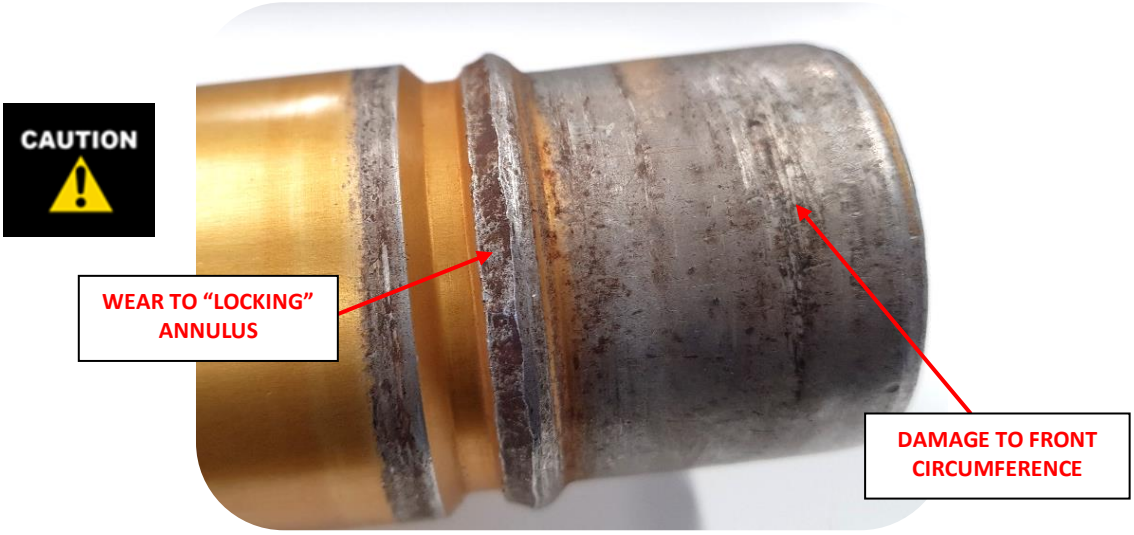

Figure 26 - Receiver with Excessive Wear

Figure 27 - Damaged Receiver

7. Replace a Receiver when damaged, or otherwise no later than;
    a. Mining; every 3 years.
    b. Rail and Light Industry; 5 years.
8. Remove a Nozzle from operation when damaged. The recommended Nozzle repair schedule is;
    a. Mining; every 4-6 months.
    b. Rail and Light Industry; every 12 months.
9. Use a Nozzle Holster or Nozzle Anchor to safely store a Nozzle (off the ground) when not in use.

Please contact Banlaw or your nearest Banlaw agent for more detailed preventative maintenance information.

6.2 Banlaw Onsite Maintenance

Clients can benefit from a **Banlaw Service Level Agreement (SLA)** to assist in the preventative and corrective maintenance of refuelling systems onsite, in addition to other diesel, fuels, oils and coolant infrastructure. This support is provided for Banlaw *and* third-party products. Clients with an SLA can *focus on their core business activities* and allow experienced Banlaw technicians and engineers to help keep such infrastructure operating at optimum ***safety, performance and reliability.***

7 TROUBLESHOOTING

This section provides troubleshooting recommendations for the range of Banlaw dry-break refuelling Nozzles when installed, operated and maintained in accordance with Banlaw guidelines.

PROBLEM	PROBABLE CAUSE AND SOLUTION

Premature nozzle shut-off during refuelling.	• Increased system head pressure downstream of (after) the Receiver. Potential causes include;
	  ○ Excessive restriction to airflow from the tank vent(s) – check breather hoses for obstructions (e.g. mud).
	  ○ The flow control valve within the OFP system is throttling the flow or faulty – investigate.
	  ○ Premature operation of the OFP system – wait for fuel in the tank(s) to settle and restart refuelling.
	• Nozzle spring setting too "low" (light) for application. Contact Banlaw or your nearest Banlaw agent for advice.
	• Receiver spring setting to high (heavy) for application. Contact Banlaw or your nearest Banlaw agent for advice.
	• Nozzle flow rate above recommended maximum. Reduce delivery flow rate.
	• Nozzle flow rate below recommended minimum. Increase delivery flow rate.
	• Excessive free-play (mechanical wear) in the Nozzles operating mechanism - replace Nozzle and have faulty Nozzle serviced.
	• A component in the system has been replaced with a component which causes increased flow restriction – investigate and return system to the previous state.
	• Faulty Level Sensor - replace Level Sensor.
	• Faulty Flow Control Valve - replace Flow Control Valve.
	• Faulty Nozzle - replace Nozzle and have faulty Nozzle serviced.
	• A foreign object is caught within the Nozzle and/or Receiver – investigate.

Refuelling operators manually overriding the automatic tank pressure shut off function of the Nozzle	• Consult with operators to locate the specific offending refuelling applications - investigate root cause(s) and rectify. • Confirm appropriate design and configuration of refuelling systems on site – standardise as far as practicable the refuelling equipment on plant equipment of similar configurations. • Provide training to refuelling operators stressing importance of the risks associated with overriding the automatic shut-off function of a Nozzle.
Tank overfilling	• If fitted, the primary "zero tank pressure" OFP system is faulty – investigate and rectify. • If using the "pressurised tank" feature of the dry-break refuelling system as a means of OFP; ○ Faulty (i.e. leaking) tank vent(s) – replace vent(s).

PROBLEM	PROBABLE CAUSE AND SOLUTION
	○ Fuel and/or air leakage from tank(s) *after* closure of the vent(s) – identify source of leakage and effectively seal (e.g. leaking manual filler point cap). • Nozzle or OFP system flow rate outside the recommended range. Maintain flowrate within the recommended minimum and maximum range. • Nozzle operating handle being forcibly held in the ON (open) position during refuelling – assess root cause(s) and rectify. • Nozzle is reopened after the tank is filled – train operator(s) on correct nozzle operation. • Nozzle spring setting too "high" (heavy) for application. Contact Banlaw or your nearest Banlaw agent for advice. • Vent pressure relief spring setting below Nozzle and Receiver shutoff value. Contact Banlaw or your nearest Banlaw agent for advice.
Fluid Leakage from Nozzle	• Faulty fluid seal(s) within Nozzle – replace Nozzle and have faulty Nozzle serviced. • Over-pressurisation of Nozzle – maintain fluid pressure under the SWP. • Temperature below minimum operating temperature of the Nozzle – replace Nozzle with a Banlaw "arctic" series Nozzle. • A foreign object is caught within the Nozzle – investigate. • Fuel overly contaminated – investigate and rectify.
Fluid Leakage between Nozzle and Receiver during Refuelling	• Faulty fluid seal(s) within Nozzle – replace Nozzle and have faulty Nozzle serviced. • Sealing surfaces on Receiver are damaged – replace Receiver. • Contamination (dirt, mud etc.) build-up within Nozzle – clean Nozzle and Receiver or replace Nozzle and have faulty Nozzle serviced. Ensure Receiver Dust Caps and a Nozzle Holster or Anchor are used. • Fuel overly contaminated – investigate and rectify. • Temperature below minimum operating temperature of the Nozzle – replace Nozzle with a Banlaw "arctic" series Nozzle.
Nozzle Uncouples from Receiver During Refuelling	• Incorrect combination of Nozzle and Receiver. Confirm compatibility. **Only use the correct combination of Nozzle and Receiver.** • Worn ball lock mechanism on Nozzle and/or Receiver. Inspect both equipment and replace if necessary. • Contamination within ball lock groove on receiver body. Clean thoroughly and reconnect nozzle. • Nozzle improperly coupled to Receiver. Try again.
No fuel flow through Nozzle	• Valve upstream or downstream within system is closed – investigate. • Banlaw FuelTrack receiver ID tag (code) has not been entered into the onsite FMS database and/or properly configured within the database. • FuelTrack receiver ID tag has not been received by local FMS depot; ○ Existing fault with auto ID dry-break system, e.g. short circuit or under-voltage – investigate and rectify. ○ Faulty auto ID chip in receiver – install new Banlaw FuelTrack Receiver.

PROBLEM	PROBABLE CAUSE AND SOLUTION
	○ Turn Nozzle on (open) and verify ID code is read. ○ Contact your onsite FMS "champion" or Banlaw Helpdesk.
Banlaw FuelTrack (or ResTrack) Auto ID System Inoperable	• System power supply has been cut (isolated) – investigate and rectify. • Short circuit or open circuit in the auto ID circuit. Test voltage available at Nozzle – refer section 0. If no voltage, fault find circuit until problem is resolved. Contact your onsite FMS "champion" for assistance.
Nozzle cannot be connected or disconnected from Receiver	• Nozzle operating ("T") Handle not latched in "OFF" (closed) position. Only attempt to connect or disconnect a Nozzle with its operating Handle latched in the "OFF" position. • Incorrect combination of Nozzle and Receiver. Confirm compatibility. **Only use the correct combination of Nozzle and Receiver.** • Worn ball lock mechanism on Nozzle and/or Receiver. Inspect both equipment and replace if necessary. • Contamination within ball lock groove on receiver body. Clean thoroughly and reconnect nozzle.

8 PRODUCT RECYCLING & DISPOSAL

Banlaw Nozzles are fully serviceable, providing extended working lives and the more responsible use of resources.

Banlaw values and supports the sustainable use of resources, and the safe, responsible and proper disposal or recycling of all materials within its products. For a description of the principal materials within a Banlaw Nozzle, please refer to section 3.

9 PRODUCT WARRANTY

Banlaw is committed to providing quality products and services. To provide further assurance, our products and services are backed by generous warranties.

A copy of the Banlaw product warranty terms and conditions is available from Banlaw, the Banlaw website, or your nearest authorised Banlaw agent.

END OF DOCUMENT

BANLAW OFFICES

AUSTRALIA / PACIFIC		AMERICAS / INTERNATIONAL
HEAD OFFICE	WESTERN AUSTRALIA	NORTH AMERICA
Phone +61 2 4922 6300	Phone +61 8 9209 1351	Phone 1 385 259 0456
Fax +61 2 4920 6171	Fax +61 8 9209 1616	Email americasales@banlaw.com
Email sales@banlaw.com	Email sales@banlaw.com	537 West 600 South #800
19 Metro Court	1/16 Oxleigh Drive	Salt Lake City
Gateshead NSW 2290	Malaga WA 6090	Utah 84101
Australia	Australia	USA

Website – www.banlaw.com