PRODUCT DATA SHEET
BVLS Model

Banlaw FillSafe™
FillSafe Zero "Venting" Level Sensors

Thank you for purchasing this high quality Banlaw product. Please read through and understand the information in this Product Data Sheet (PDS) BEFORE installation or operation to avoid accidental personal injury or property damage.

1 PRODUCT DESCRIPTION

The range of **Banlaw FillSafe™** ***Zero*** overfill protection (OFP) systems is designed for the safe and reliable refuelling/refilling of diesel fuel tanks, commonly used in the mining, rail, port, construction and other off-road industries. The system comprises two (2) major assemblies;

- Banlaw Flow Control Valve (e.g. BFCV50 model);
  - Valves incorporating a dry-break receiver front-end, or;
  - Valves incorporating a process connection (e.g. thread) at the inlet.
- Banlaw Level Sensor (BVLS model);
  - Refer BVLS80 example to the right.

IMPORTANT: This product is part of a ***system***, where the system may be one of multiple configurations. This document includes certain information for the safe and proper inclusion of this product within a FillSafe Zero system, however end-users ***must*** also refer to the following Banlaw documents when configuring, installing and commissioning a FillSafe Zero system;

- Banlaw Product Data Sheet (PDS) for the relevant FillSafe Zero Flow Control Valve.

Failure to consult such documents is likely to cause system malfunction and will void any Banlaw warranty claim.

"IF IN DOUBT, PLEASE ASK!"

Aspects of this product and the Banlaw FillSafe Zero system are subject to patents and patents pending.. Please see www.banlaw.com for further details.

CAUTION	
	The content of this document is <u>not</u> meant to override or substitute any applicable Statutory, Regulatory, Customer/Site, etc. Health Safety & Environment (HS&E) requirements.
	All works should only be performed by trained, qualified and competent personnel who are aware of the hazards associated with the constituent components of this installation in addition to the system as a whole. Failure to comply with these practices may result in death, serious bodily injury, loss of equipment and environmental damage.
	A risk assessment (job hazard analysis - JHA) should be conducted PRIOR to the start of any works or actions within this document. Whilst every effort has been made to ensure the execution of this document represents no HS&E hazard, Banlaw takes neither responsibility nor liability for the consequences and damages that may occur in the execution of works within this document.
	Persons conducting or otherwise involved with the execution of the works within this document and project have an obligation to ensure that all HS&E requirements are known and understood, and subsequently followed at all times.

The important features of the BVLS model Level Sensors are illustrated in Figure 1.

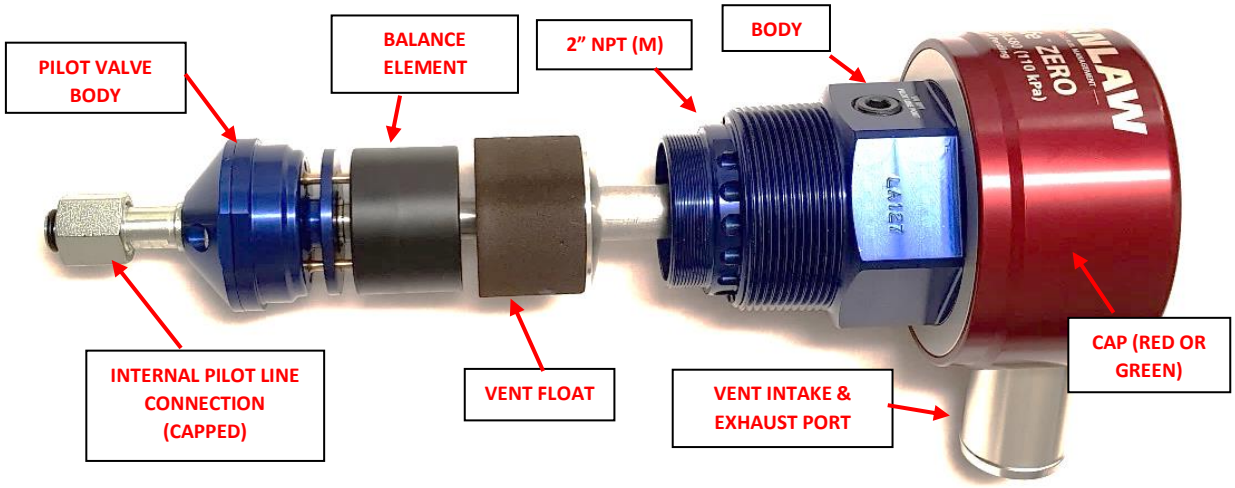

Figure 1 - Features of the BVLS Model Level Sensors

Figure 2 illustrates the 2 ports within the Body of the Level Sensor (**Cap with Port can be rotated**).

Figure 2 - External Pilot Line and Tank Pressure Indicator Ports (normally plugged/sealed)

The BVLS model Level Sensors consist of the following separate Level Sensor Assemblies;

- **BVLS80**; **80mm (3.1")** nominated ullage[1], **110kPa (16psi)** integral pressure relief valve setting, **red** Cap.
- **BVLS80-L**; **80mm (3.1")** nominated ullage[1], **49kPa (7psi)** integral pressure relief valve setting, **green** Cap.
- **BVLS180**; **180mm (7.1")** nominated ullage[1], **110kPa (16psi)** integral pressure relief valve setting, **red** Cap.
- **BVLS180-L**; **180mm (7.1")** nominated ullage[1], **49kPa (7psi)** integral pressure relief valve setting, **green** Cap.

"Arctic" (extreme cold temperature climate) Valve assemblies incorporate the suffix "-CT" in the part number, e.g. BVLS80-CT.

[1] Nominal Tank Ullage – measured from the bottom (base) of the Level Sensor 2" NPT (M) mounting thread – refer Figure 3 and Figure 17. **A tolerance of ± 5mm (± 0.2") applies to dimension "B".**

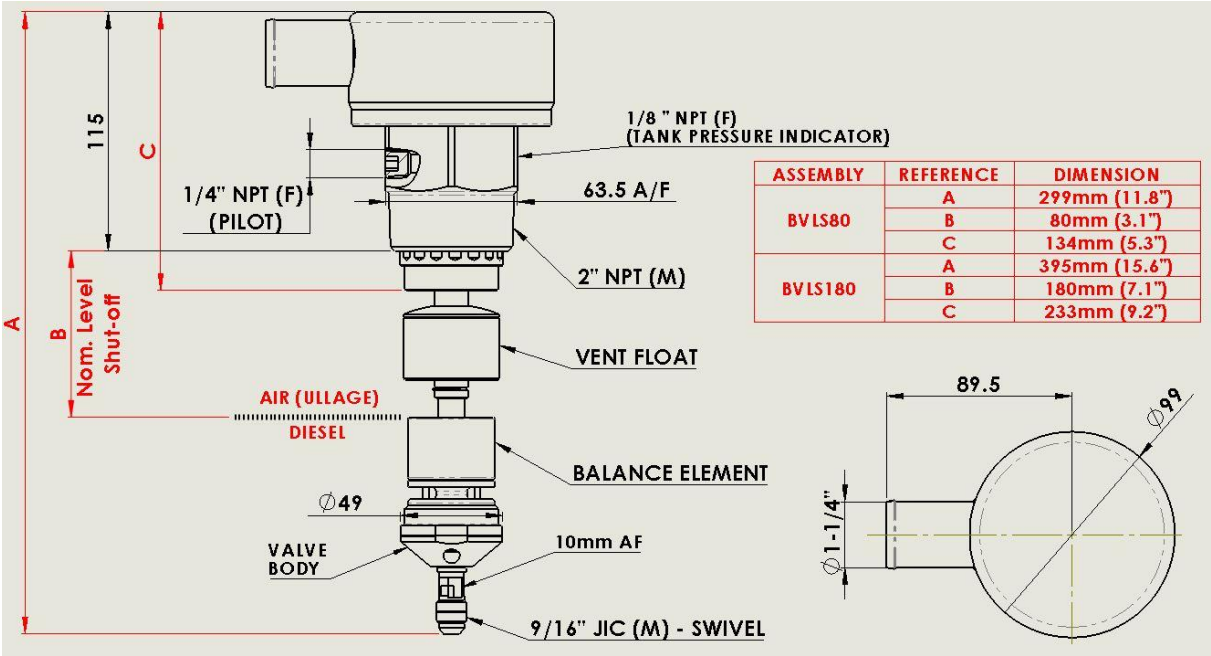

ASSEMBLY	REFERENCE	DIMENSION
BVLS80	A	299mm (11.8")
	B	80mm (3.1")
	C	134mm (5.3")
BVLS180	A	395mm (15.6")
	B	180mm (7.1")
	C	233mm (9.2")

Figure 3 - BVLS Model Schematic

The specific part number for each Level Sensor is marked on the Cap – refer Figure 4 for examples.

Figure 4 - BVLS "Red" (110kPa) and "Green" (49kPa)

Each BVLS assembly is marked with a unique serial code for traceability purposes – refer Figure 5.

Figure 5 - Example of Unique Serial Code

2 KEY FEATURES AND OPERATION

Key advantages of the Banlaw FillSafe BVLS series "Venting" Level Sensors;

- Option to accommodate either an internal Pilot Line *or* external Pilot Line (Pilot Line routed from a Banlaw FillSafe Flow Control Valve). Only a single fuel pilot (signal) line is required to connect the FillSafe Zero Level Sensor and Flow Control Valve assemblies.
- Rated for a maximum tank refuelling flowrate of **1,000LPM (264GPM)**, meaning only a ***single*** BVLS assembly is required for use with a compatible Banlaw FillSafe Flow Control Valve (e.g. BFCV43, or BFTFCV43) and the Banlaw **1000** series dry-break refuelling system;
    - Is also rated for a maximum tank decanting (discharge) flowrate of **1,000LPM (264GPM)**.
- Integrated rollover "anti-spill" protection feature, meaning the Level Sensor is sealed if the tank rolls onto its side (or fully over) preventing the discharge of fuel from the tank via the Level Sensor in the event of such an incident.
- Integrated pressure relief valve[2] with the option of 2 settings;
    - "**Red**" Cap; 110kPa (16psi).
    - "**Green**" Cap; 49kPa (7psi).
        - [2] The pressure relief valve is incorporated as a partial pressure relief valve and should *not* be used as a primary dedicated "emergency safety device" to protect a tank from internal over-pressurisation, i.e. exceeding the tank's maximum safe working pressure (SWP).
- Incorporates a **Vent Float** which serves to maintain the Banlaw (or compatible) dry-break diesel refuelling system as a viable (functional) secondary means of tank overfill protection (OFP) in the unlikely event the FillSafe Zero system fails;
    - Such dry-break systems rely on the short term internal pressurisation of the tank to trigger the automatic shut-off (closure) of the refuelling nozzle. Tank SWP will need to be greater than the required pressure using the dry-break system to mitigate tank over-pressurisation – contact tank OEM and Banlaw for advice.
- Robust metal construction, specifically for parts mounted external to the fuel tank which may be subject to impact and harsh operating conditions.
- The internal Pilot Line connection (9/16" JIC) incorporates a swivel mechanism, to prevent twisting of the (internal) Pilot Line during installation of the Level Sensor.
- The exhaust/intake port can accommodate a 1-1/4" breather hose and hose clamp.
- *"Arctic"* variants rated for operation down to -51°C (-60°F).

2.1 BVLS Normal Function – Primary OFP Operation

Figure 6 illustrates an example of a FillSafe Zero system incorporating a BFCV50 or BFTFCV50 model Flow Control Valve in conjunction with a Banlaw BVLS model Level Sensor and ***internal*** Pilot Line. The tank is being refilled in this illustration;

- **Level Sensor;** Balance Element "down" (in air), Pilot Line passage open, and BVLS venting air from the tank to atmosphere.
- **Flow Control Valve;** open, allowing fuel to enter the tank.
- **Dry-break Diesel Refuelling Nozzle;** securely connected and in the **ON** (open) position.

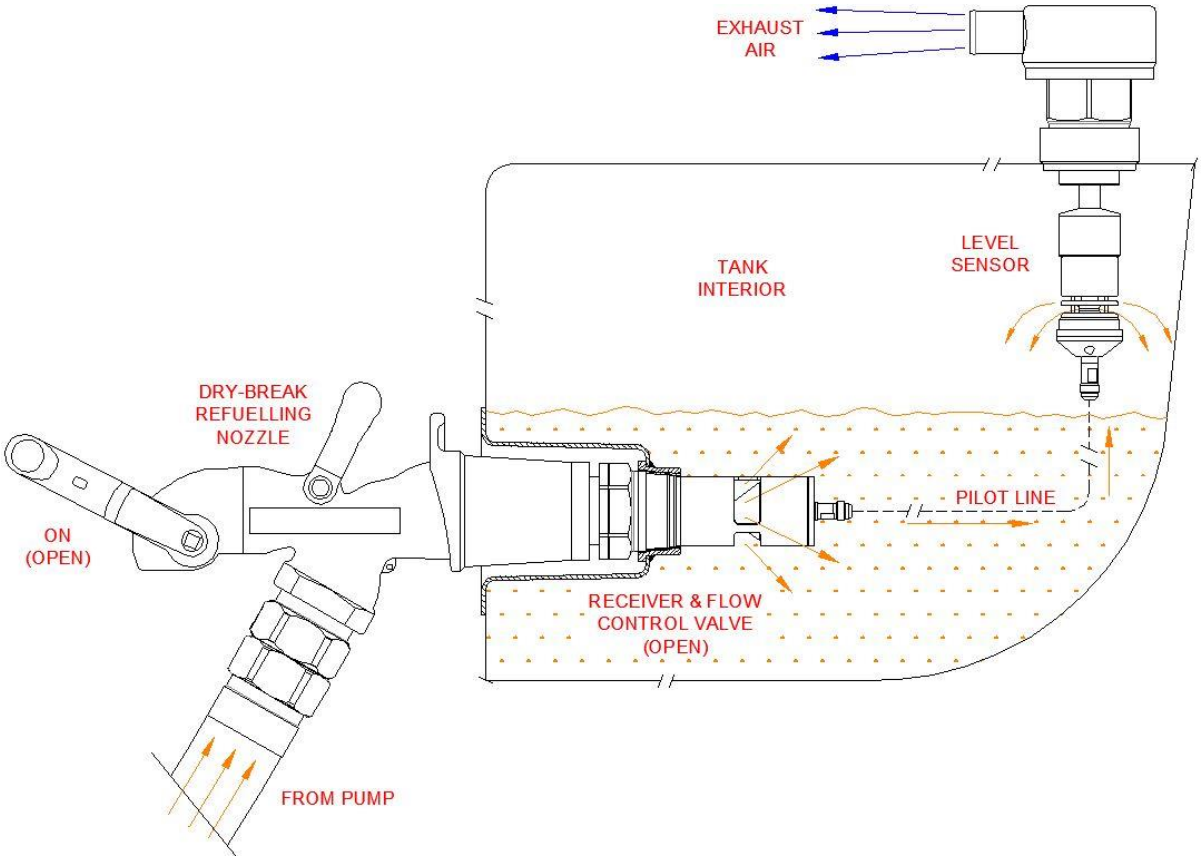

Figure 6 - Example of FillSafe Zero Install - Tank Filling

Figure 7 now illustrates this same system once the tank has been filled to the nominated capacity;

- **Level Sensor;** Balance Element raised (within liquid fuel) and Pilot Line passage closed.
- **Flow Control Valve;** closed, prohibiting fuel entering the tank.
- **Dry-break Diesel Refuelling Nozzle;** in the **OFF** (closed) position, awaiting disconnection.

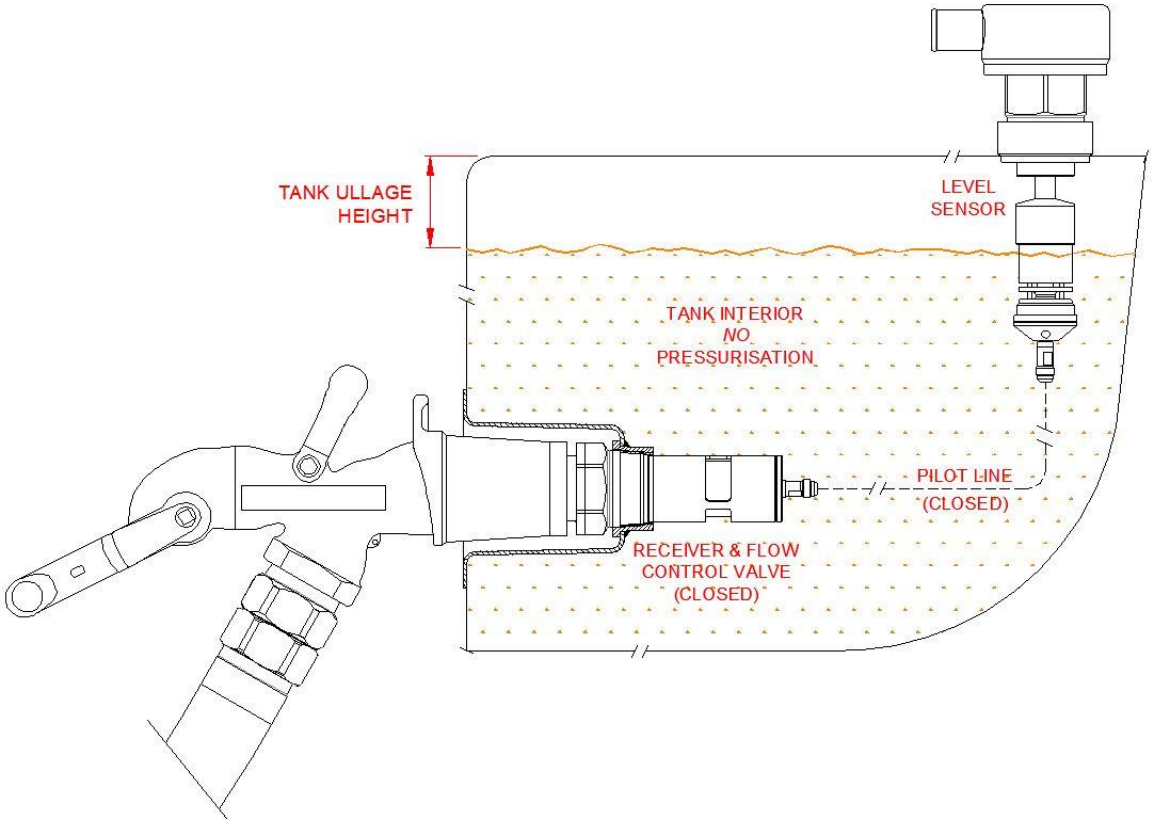

Figure 7 - Example of FillSafe Zero Install - Tank Full

Figure 8 illustrates a further example of a FillSafe Zero system incorporating a BFCV23 or BFCV43 model "Direct" Flow Control Valve in conjunction with a Banlaw BVLS model Level Sensor and ***external*** Pilot Line. Note the ***internal*** Pilot Line connection on the base of the BVLS model Level Sensor is now ***sealed*** (capped).

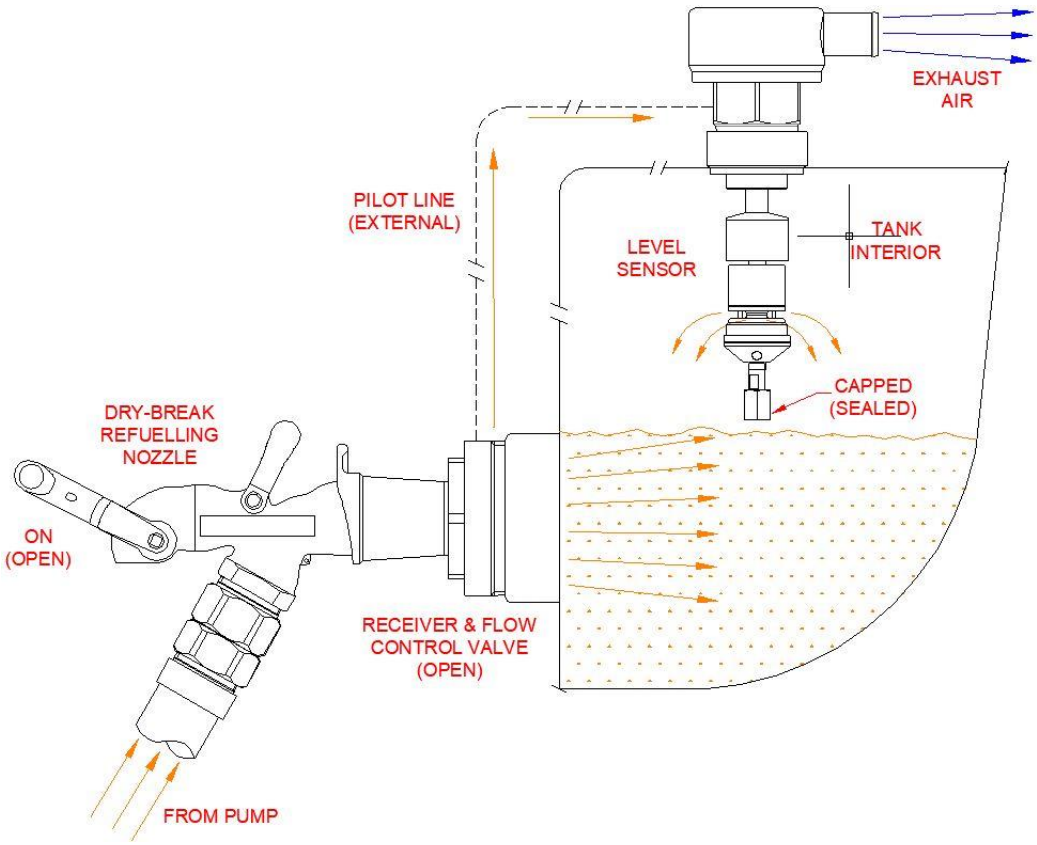

Figure 8 - Banlaw "Direct" Flow Control Valve with BVLS Model and External Pilot Line

The mode of operation (operating procedure and sequence of events) of the alternate FillSafe Zero system in Figure 8 is the same as the previous example illustrated in Figure 6 and Figure 7. Both examples are shown to demonstrate the option of either an internal or external Pilot Line with a BVLS model Level Sensor.

2.2 BVLS "Vent Float" Function – Secondary OFP Operation

Figure 9 and Figure 10 now illustrate the purpose of the ***Vent Float*** in the event the FillSafe Zero system – i.e. the primary OFP system – ***fails*** to terminate the inflow of fuel into the tank at the prescribed fuel level. The key purpose of the Vent Float is to seal the passage of the exhaust air from the Level Sensor as fuel continues to enter the tank. This subsequently starts to pressurise the tank interior until the inflow of fuel is terminated, typically by the automatic shut-off of the dry-break nozzle. The degree of internal tank pressure required to trigger nozzle shut-off depends on a number of factors – including the incoming fuel flowrate.

CAUTION

This secondary (backup) means of fuel flow shut-off is useful, *however*, to protect the tank from over-pressurisation, the SWP of the tank must be ***above*** the (tank) pressure required to shut-off the nozzle. *In the event the SWP is below the required tank pressure, the role of this secondary OFP feature is unlikely to prevent the over-pressurisation of the tank and other incidents (e.g. fuel spillage, tank rupture, etc.).*

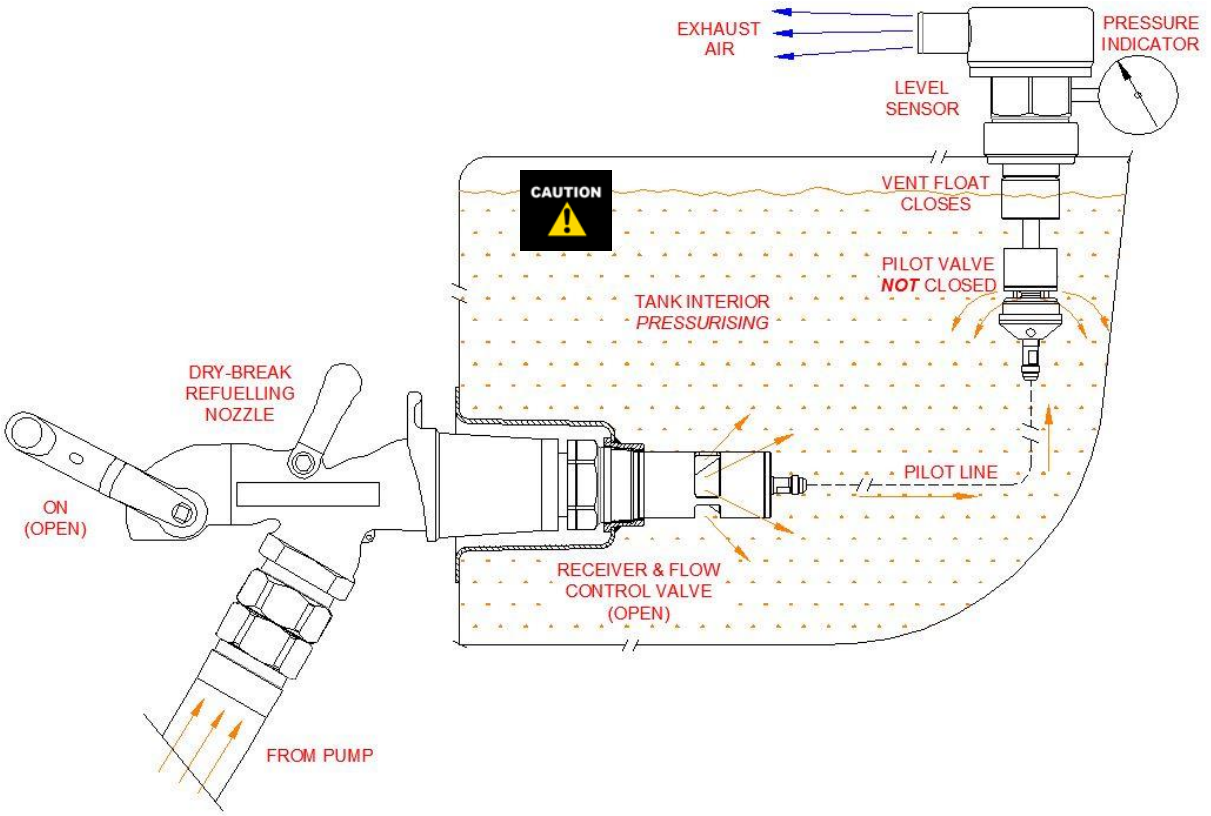

Figure 9 - Vent Float now "Closes" after Pilot Line remains "Open" – Tank Pressurising

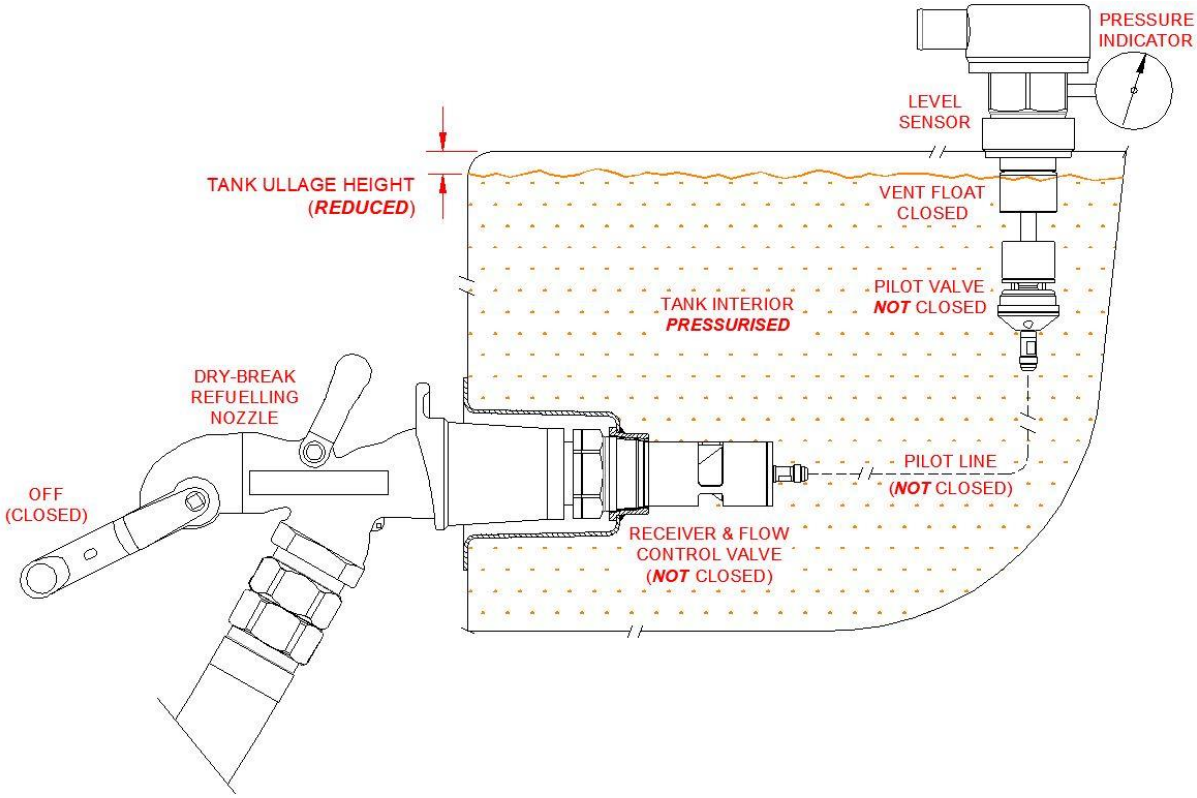

Figure 10 – "Pressurised Tank" Automatically Closes Nozzle

Once the tank pressure reaches the required pressure to trigger nozzle shut-off, the pressure within the tank will return to atmospheric (ambient) pressure once the fuel level drops, "opening" the Vent Float. For the purposes of improved illustration, Figure 9 and Figure 10 include the optional ***"pressure indicator"*** fitted to the 1/8" NPT "tank pressure sensing" port of the BVLS model level sensor. The key role of this pressure indicator is to provide a visual means of detecting the tank has been pressurised during a recent tank refuelling activity, indicating a potential failure of the primary FillSafe Zero OFP system. In the event this indicator is triggered, the tank should ***NOT*** be refuelled until the root cause of the "tank pressurisation" has been identified and rectified.

2.3 BVLS "Pressure Relief" Feature Operation

Figure 11 illustrates the purpose of the ***(partial) Pressure Relief Valve*** within the BVLS model level sensors in the event the primary "normal operation" and secondary "vent float" features of the FillSafe Zero system ***both*** fail to terminate the inflow of fuel into the tank. The probability of such an event is low, however is more likely to occur in the event the refuelling nozzle is forcibly held in the open (ON) position and after failure of the primary OFP feature. Forcibly maintaining the nozzle in the open position is a habit by some operators, and is completely ***contrary to proper nozzle operating procedure***. One reason for such an improper practice is due to premature shut-off of the nozzle due to excessive system back pressure (pressure drop) through the tank refuelling ***system*** – i.e. from the receiver through to the outlet of the tank vent. ***Premature nozzle shut-off is preventable***, and is an event which should not be tolerated but instead properly investigated and rectified – please contact Banlaw for further advice.

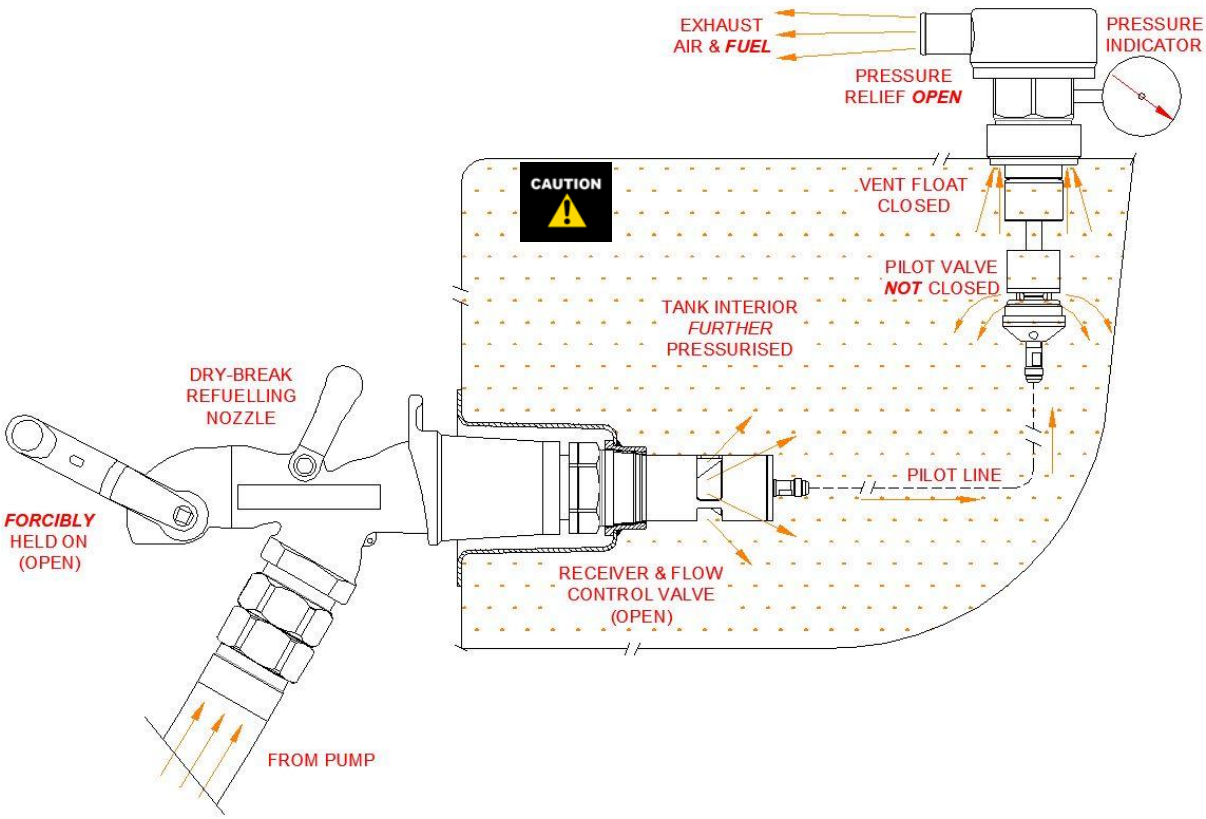

Figure 11 - Partial Pressure Relief Valve Open

WARNING
DANGER

The pressure relief feature within the BVLS model level sensors is designated as "partial", for the key reason the role of this feature does ***NOT*** include the prevention of tank (internal) over-pressurisation. This feature should not be considered a valid safety device to prevent the maximum design (SWP) pressure of a tank from being breached. Instead, end-users of this Banlaw product are encouraged to conduct a risk assessment – e.g. FMECA or HAZOP – for each specific application (installation) of the Banlaw FillSafe Zero *system*, or the BVLS model Level Sensor (alone). As required, a separate pressure relief safety device shall be installed onto the tank in combination with this Banlaw product to prevent the tank design (SWP) from being breached. Such a device must be selected based on specifications specific to each tank, the application(s) in which the tank shall be used and refuelled/refilled, and in accordance with all applicable governances.

2.4 BVLS Roll-Over "Anti-Spill" Feature Operation

Figure 12 illustrates the roll-over "anti-spill" feature of the BVLS model Level Sensors. In the event the tank "rolls over" – i.e. in an emergency situation - and the Level Sensor is flooded, this feature will mitigate the spillage of fuel from the tank via the Level Sensor. This feature is for emergency purposes only, and should not be relied upon as an effective means of positively isolating fuel discharge from the Level Sensor should a tank be rolled over for maintenance etc. purposes.

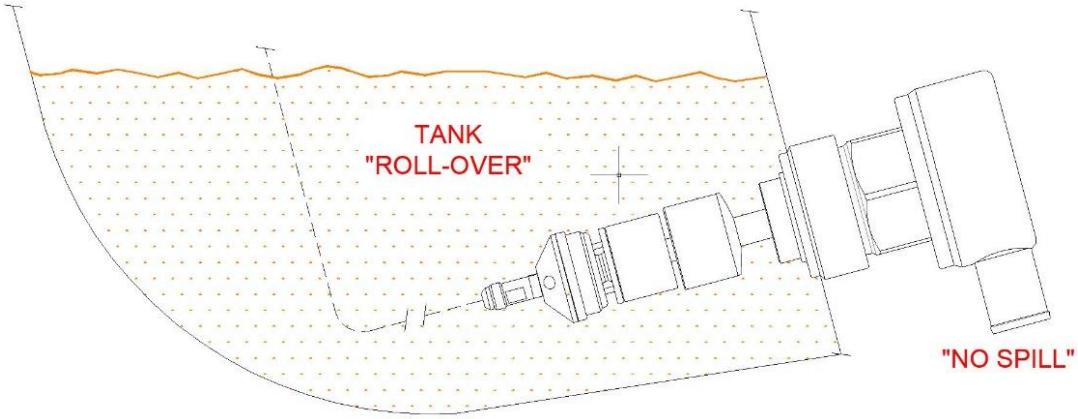

Figure 12 - Roll-Over Anti-Spill Feature

3 IMPORTANT RESTRICTIONS ON THE USE OF THIS PRODUCT

WARNING
DANGER

1. The safe installation and subsequent operation of a Banlaw product relies on the completion of all necessary ***"due diligences"*** for the assessment of the Banlaw product(s) being suitable for the intended application(s). Such an assessment is best achieved through the mutual cooperation of the supplier/OEM (Banlaw) and the customer or end-user. Once such an assessment deems the Banlaw product(s) to be suitable, the customer or end-user shall ensure effective ***"change management"*** applies should any influencial aspect of the application (upon which the initial assessment was based) be subject to change and may affect the ongoing suitability (i.e. safety and proper function) of the Banlaw product.
2. The Banlaw FillSafe Zero BVLS model Level Sensors incorporate components manufactured from **aluminium**. Products containing **external (exposed) aluminium** are typically unsuitable for use within an underground coal mine, or otherwise within an area where the use of external aluminium components (or other materials within the product) are prohibited for use in such areas in accordance with applicable governances.

CAUTION

1. Unless noted otherwise by Banlaw, the Banlaw FillSafe Zero tank overfill protection (OFP) system has *not* been assessed under any Regulatory or Industry Standard, Code, Directive, Guideline or other governance which may apply to the use of this product in applications where a governance applies. Please consult Banlaw prior to installation if in doubt.
2. The Banlaw FillSafe Zero system is designed for use only with ***clean*** (i.e. filtered) automotive grade diesel fuels, including commercial bio-diesel blends. This Banlaw product is ***not*** recommended for use with waste diesel fuel, or with diesel fuel containing contamination levels beyond those stipulated by governances and guidelines such as the current Worldwide Fuel Charter (WWFC) and fuel quality requirements of modern diesel engine manufacturers (OEM's). *The use of this product with fuel of higher contamination levels may cause the improper operation (failure) of the product and other detrimental effects.* Banlaw recommends adequate fuel contamination controls (e.g. filtration) for all fuels passing through the Banlaw FillSafe Zero system.
3. Specifically for *"Arctic"* model Valves, noticeable physical changes (e.g. clouding, additive drop-out, agglomeration, thickening, etc.) in the diesel fuel passing through the Valve may cause reduced functionality of the Valve and the FillSafe Zero OFP system.

Note:

This product is unsuitable for use with AdBlue (DEF) or with an alternative fluid (or substance) whose properties may affect the safety, function or reliability of the product. Please consult with Banlaw to confirm fluid compatibility if in doubt.

4 PRODUCT SPECIFICATIONS

BANLAW BVLS MODEL LEVEL SENSORS	
Max. Air Flow Rate#	1,000 LPM (264 GPM), 60m³/hr (2,118 SCFH)
Integral Pressure Relief Setting	**Red** Cap; 110kPa (16psi) **Green** Cap; 49kPa (7psi)
Operating Temp. Range °C (°F)	"Standard" Series; -10°C (14 °F) to 55°C (131°F) "*Arctic*" Series; -51°C (-60°F) to 55°C (131°F)
Compatible Fluid Types	***Clean*** Diesel Fuels, including Bio-Diesel Blends
Principal Material Composition	Zinc Plated Steel, Aluminium, Brass, Stainless Steel, Viton®, Nitrophyl®, Acetal, Fluorosilicone (*arctic* series)
Process Connections	Tank Mounting; 2" NPT (M) Vent Breather Hose; 1-1/4" (DN31) Tank Pressure Indicator; 1/8" NPT (F)
Pilot Line Port Connections##	*Internal* Pilot Line; 9/16" JIC (M) – Swivel *External* Pilot Line; 1/4" NPT (F)
Nominal Mass of Level Sensor (BVLS80)	1.4kg (3.09lb)

Legend: **"LPM"**; Litres per minute (volumetric flowrate)
"GPM"; US Gallons per minute (volumetric flowrate)
"SCFH"; Standard cubic feet per hour (air volumetric flowrate)
"Max."; Maximum (upper limit)
"Min."; Minimum (lower limit)

Notes: # Refers to both tank refuelling (air discharge) and tank decanting (air intake) maximum flowrates.
Option of either internal *or* external Pilot Line. **Redundant (unused) connection must be *sealed*.**
The core function of *"Arctic"* model Level Sensors has been tested by an independent laboratory at -51°C (-60°F).

4.1 FillSafe Zero Pilot Lines

The Banlaw Vented Level Sensor (BVLS model) may be connected to the Banlaw Flow Control Valve 2" (e.g. BFCV50, BFCV50R, etc.) via an ***internal*** Pilot Line (i.e. routed within the tank), or to an array of alternate Flow Control Valves (e.g. BFCV23, BFCV43, etc.) via an ***external*** Pilot Line (i.e. routed external to the tank).

CAUTION

- **Specifications (including limits/thresholds) apply to all FillSafe Zero Pilot Lines**, so please contact Banlaw at time of order to ensure correct Pilot Line selection.
- Please refer to the applicable **Banlaw FillSafe Zero System Installation Procedure** for details on the proper installation & commissioning of internal and external Pilot Lines.
- **The use of a non-genuine Banlaw Pilot Line, or otherwise, the use of a Pilot Line which does not conform with Banlaw specifications may cause the improper, unsafe and unreliable operation of the FillSafe Zero system.**

Figure 13 - Example of a genuine Banlaw *Internal* Pilot Line

Figure 13 illustrates some of the key specifications of an *internal* Pilot Line, namely the means of mechanical protection to help avoid excessive wear & tear, rupture, and other damage to the hose assembly. ***Internal Pilot Lines are especially susceptible to damage (and subsequent failure) sustained within diesel fuel tanks due to contact with such structures as internal baffles, and also***

fatigue due to "flexing" of the line in response to the movement (i.e. turbulence and sloshing) of the fuel. Reference to the **Banlaw FillSafe Zero System Installation Procedure** must be made ***prior*** to any attempt to install an internal Pilot Line assembly to best avoid such failure modes. The Installation Procedure also includes hints on the most appropriate methods, tools & accessories to use.

Unless otherwise noted by Banlaw, some of the key Pilot Line specifications and requirements include;

1. **Internal Pilot Lines;**
    a. Supplied by Banlaw, or otherwise manufactured strictly in accordance with Banlaw specifications.
    b. Minimum ID (bore); 8mm (5/16").
    c. Maximum recommended overall length; 3.5m (11.5'). Contact Banlaw for applications requiring an extended length.
    d. Maximum recommended vertical head; 2.5m (8.2') between Flow Control Valve location (lower) and Level Sensor location (top). Contact Banlaw for applications requiring an extended head height.
    e. Minimum (internal) safe working pressure (SWP); 2,500kPa (25 bar, 363psi).
    f. Installed within a diesel tank;
        i. To achieve the *minimum* possible Pilot Line length. Excess Pilot Line length should be avoided.
        ii. Via a routing (pathway) which minimises the probability for contact between the Pilot Line and structures within the tank, e.g. baffle plates, structural members, drop pipes, etc.
        iii. If passing through a baffle plate port (or similar opening), every effort is made to ensure the Pilot Line is not held against the edge of such ports.
        iv. Any twisting or sharp (small) radius bends of the Pilot Line must be avoided. The *swivel* action of the Pilot Line connections at the base of a BVLS model Level Sensor and at the rear of a 2" BFCV50 model Flow Control Valve are to be tested (verified) prior to connecting the Pilot Line – refer relevant PDS's.
        v. Other than the weight of the Pilot Line itself, no additional mass or tension (stretch) shall be added to the hose assembly.
2. **External Pilot Lines;**
    a. Supplied by Banlaw, or otherwise manufactured strictly in accordance with Banlaw specifications.
    b. Minimum ID (bore); 9.5mm (3/8");
        i. 12mm (1/2") recommended for Pilot Lines exceeding approx. 4m (13.1') length.
    c. Maximum recommended overall length; 10m (33'). Contact Banlaw for applications requiring an extended length.
    d. Maximum recommended vertical head; 4m (13') between Flow Control Valve location (lower) and Level Sensor location (top). Contact Banlaw for applications requiring an extended head height.
    e. Minimum (internal) safe working pressure (SWP); 2,500kPa (25 bar, 363psi).
    f. Installed external to the diesel tank;
        i. To achieve the *minimum* possible Pilot Line length. Excess Pilot Line length should be avoided.
        ii. Adequately supported using hose clamps (or similar) – refer Figure 14.
        iii. Via a routing (pathway) which minimises the probability of damage due to sharp edges, impact, excessive wear & tear, and relative movement (e.g.

rubbing) between the hose and another surface. Any potential contact with sharp edges or movement against a surface should be mitigated by improved routing or support of the hose, or by inclusion of a protective sheath (outer cover) over the hose.

iv. Any twisting or sharp (small) radius bends of the Pilot Line must be avoided.

v. Other than the weight of the Pilot Line itself, no additional mass or tension (stretch) shall be added to the hose assembly.

vi. Routing between 2 relative moving surfaces, e.g. through an articulated region of a vehicle (e.g. front end loader, etc.), should be avoided where possible. If not, routing and support of the hose over this region must be as per the hose OEM guidelines for such applications to avoid accelerated wear and fatigue of the hose.

Figure 14 - Example of External Pilot Line Retention

5 INSTALLATION & COMMISSIONING GUIDELINES

This Installation & Commissioning Guide is general, and is not meant to replace or override installation guidelines that arise out of a *due diligence* assessment of a Banlaw product for a specific (intended) application.

The scope of this section applies to the Banlaw BVLS model Level Sensor assemblies. Whilst other FillSafe Zero products are mentioned – e.g. Flow Control Valves and Pilot Lines – end-users must refer to ***separate*** Banlaw documentation covering each product *prior* to installation.

Note:

General Installation Notes;

1. Conduct a **Job Hazard Analysis** (JHA) ***prior*** to install to mitigate health, environmental and equipment hazards.
2. Do ***NOT*** install any parts that are damaged or are otherwise faulty.
3. Do ***NOT*** install parts which are not compatible with mating parts or parts which do not satisfy the specifications of the FillSafe Zero system.
4. Conduct all necessary measures to ***prevent the ingress of contamination*** into the Banlaw Level Sensor and other parts.
5. Only engage threads of the same thread type. Ensure all threaded connections are clean and in good condition. Avoid over-tightening.
6. An appropriate thread sealant is recommended on the NPT threaded process connections. Use ***sparingly*** and ***avoid excess use of Loctite*** and similar products – *residual thread sealants etc. may cause contamination and malfunction of the FillSafe Zero system*. No thread sealant is required on the JIC Internal Pilot Line connection.
7. Use only proper ***handtools*** for the installation of all components. Avoid the use of power or impact tools, and adjustable wrenches (e.g. stilsons).
8. Use consumables (e.g. Loctite products) strictly in accordance with the OEM Safety Data Sheet (SDS) and operating guidelines. Do not use consumables beyond their expiry date.

5.1 Pre-Installation Guidelines

CAUTION

Any proposed installation/application/operation of the Banlaw FillSafe Zero Level Sensor shall satisfy the Specifications detailed in section 4, and other requirements within this document. The specifications for any other parts & equipment included within this install must also comply with the parameters (e.g. pressure, temperature, flowrate, etc.) of the application. ***Failure to ensure this Banlaw product and other equipment are used strictly in accordance with their applicable specifications will introduce potentially serious safety hazards.***

The maximum permissible angle (gradient) for the proper and reliable operation of the BVLS model Level Sensor Assemblies is illustrated in Figure 15, i.e. ± 25° from the vertical (upright) position.

No attempt should be made to refuel a tank using the FillSafe Zero system in the event the "angular limits" of safe operation of the Level Sensor are exceeded.

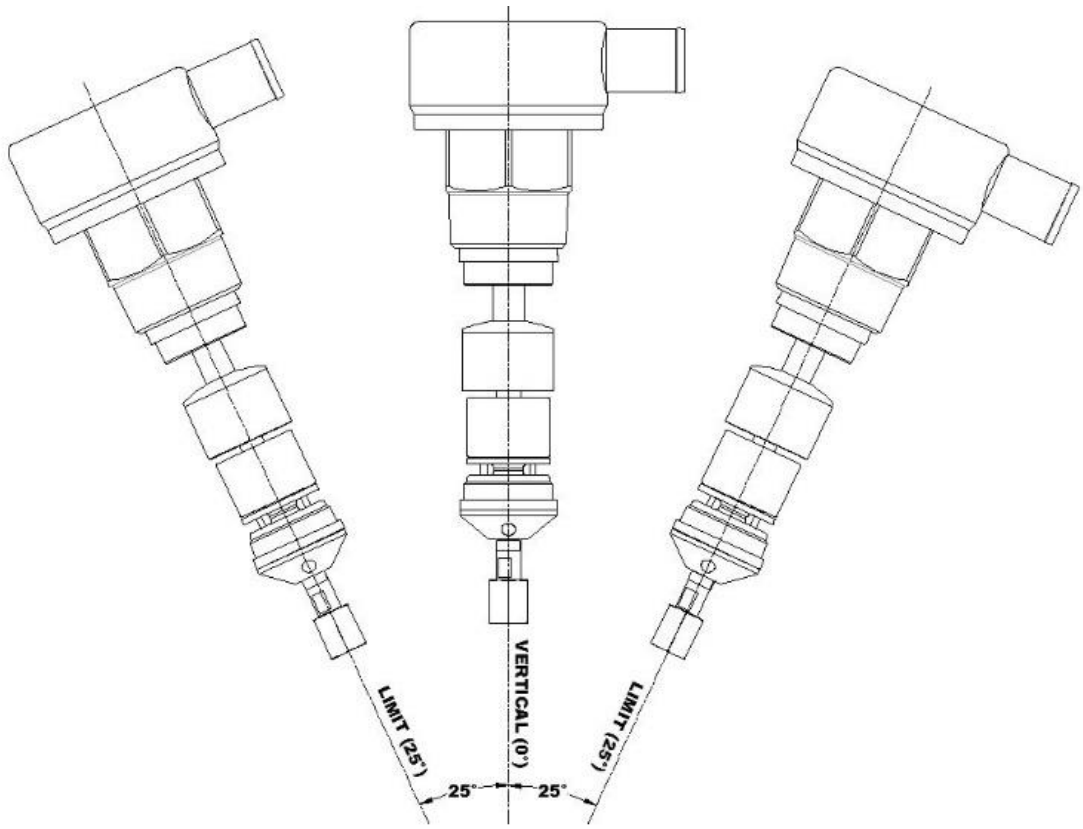

Figure 15 - Angular Limits of Level Sensor Operation

Figure 16 illustrates an important condition of the BVLS80 series vent porting in relation to the surrounding 2" NPT half coupling used to mount the level sensor to the tank top. Once installed, ***it is critical the distance from the base of the half coupling bore (ID) to the domed top of the Top Float is not less than 15mm (0.6") .*** Failure to comply with this condition will jeopardise the proper "tank venting" function of the level sensor during tank refuelling, by causing the top float to prematurely rise and seal the venting passage. The use of a Banlaw AUS25AA-1 Half Coupling will ensure this condition is satisfied – an alternate half socket may require shortening (truncation).

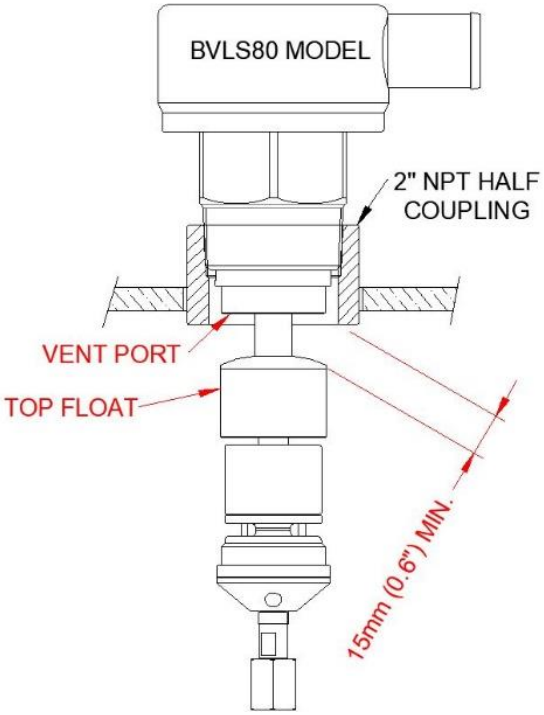

Figure 16 – Restriction on Length of 2" NPT Half Coupling with BVLS Level Sensor

5.1.1 Tank Ullage – Required Tank Fill Level

The range of BVLS model Level Sensors currently available – refer part numbers in section 1 – allows end-users to attain a variety of tank ullages, i.e. tank fuel fill levels (and hence fuel volume capacities). Figure 17 illustrates the preferred means of installing a Level Sensor onto the top of a tank using a **2" NPT Half Coupling** (e.g. Banlaw AUS25AA-1).

CAUTION

Similarly to a Banlaw Tank Vent – as used within a Banlaw dry-break diesel refuelling system – a Level Sensor ***cannot*** be installed within a riser pipe, manual fill (splash-fill) spout, or similar device which extends the ***installed*** height of the Level Sensor above the top of the tank to the extent the proper and reliable function of the core features (refer section 2) of the Level Sensor are jeopardised. Figure 17 illustrates the required means of mounting a Level Sensor to the ***top*** of a tank. ***Please contact Banlaw or your nearest authorised Banlaw distributor for further information and advice.***

Dimension "**B**" relates to the reference dimension used to define the range of Level Sensors available, e.g. "**80**mm" for a BVLS**80**. **A tolerance of ± 5mm (± 0.2") applies to dimension "B".** The remaining dimensions allow the end-user to determine the tank ullage attained once a Level Sensor is installed. This calculation must be performed ***prior*** to the installation of a Level Sensor, so that the required fuel level and fuel capacity within the tank are achieved.

REFERENCE DIMENSION	DESCRIPTION
B	As per BVLS Part Number. Refer section 1 and Figure 3.
D	Shut-Off Level from exterior of tank top.
E	Distance from exterior of tank top to top of 2" NPT Half Coupling.
F	Distance from top of BVLS to top of tank
T	Thickness of tank top.
"ULLAGE"	Vapour space (height) within tank at Shut-Off Level.

ULLAGE (mm) = B - (F – 115) – T
ULLAGE (inches) = B – (F – 4.53) - T

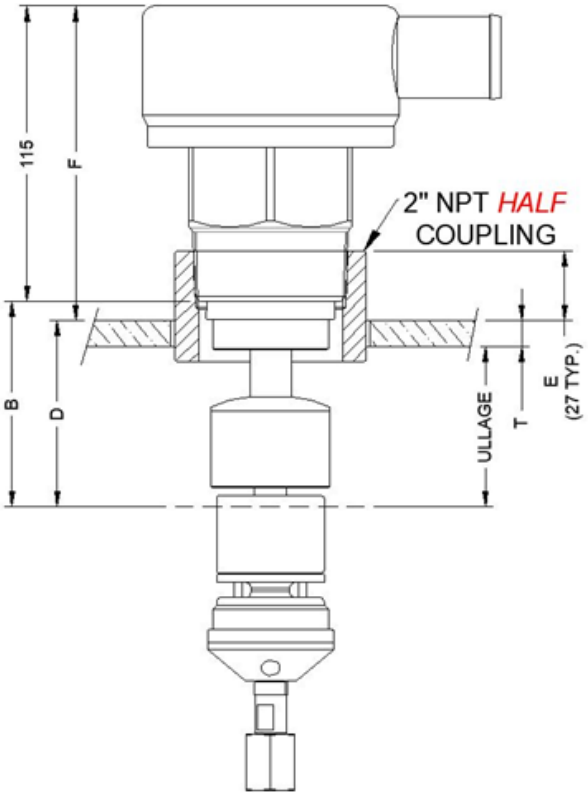

Figure 17 - BVLS Level Sensor and Tank Ullage

5.1.2 Fuel Density and "Liquid Foaming"

Key performance specifications of the BVLS model Level Sensors have been determined using liquid automotive grade diesel fuels, with a density (SG) range of 0.82 to 0.86. ***Specifications such as the Shut-Off (closure) Levels of the Float Control Valve and Top Float Valve will vary in response to liquid density.*** **The proper function of these features of the Level Sensor will be affected by issues such as foaming (aeration) of the liquid diesel.**

Significant reductions in liquid density will occur with diesel foaming (aeration). Such issues often occur through the relatively poor design of the fuel entry into the tank, e.g. the lack of a "drop pipe" to convey the incoming fuel stream to a discharge point into the bottom area of the tank interior. The use of a drop pipe is not always viable, however all possible measures must be incorporated into the design and location of a tank ***inlet*** to minimise or mitigate;

- The discharge of the (incoming) pressurised fuel stream into "free air".
- The velocity of the fuel stream as it enters the tank interior.

The discharge of fuel foam from the Level Sensor exhaust port during refuelling will typically indicate a foaming issue within the tank. ***Unless verified otherwise, the proper, safe and reliable function of the Level Sensor and thus the FillSafe Zero system is likely to be jeopardised until the excess foaming issue is addressed.*** Please contact Banlaw or your nearest authorised Banlaw distributor for further advice.

5.1.3 Proximity to Incoming Fuel Flow

CAUTION

The proper function of a BVLS Level Sensor may be jeopardised as a result of direct impact with (or excessive turbulence from) the incoming fuel stream. Every available effort shall be made to ensure the tank inlet and location of the Level Sensor are not arranged (positioned) such that the fuel flow impacts the Level Sensor in a manner similar to that shown in Figure 18. **A similar problem may occur when using a "direct into tank" Banlaw BFCV50 series Flow Control Valve** – please refer to the Product Data Sheet (PDS) for the Valve for further guidance.

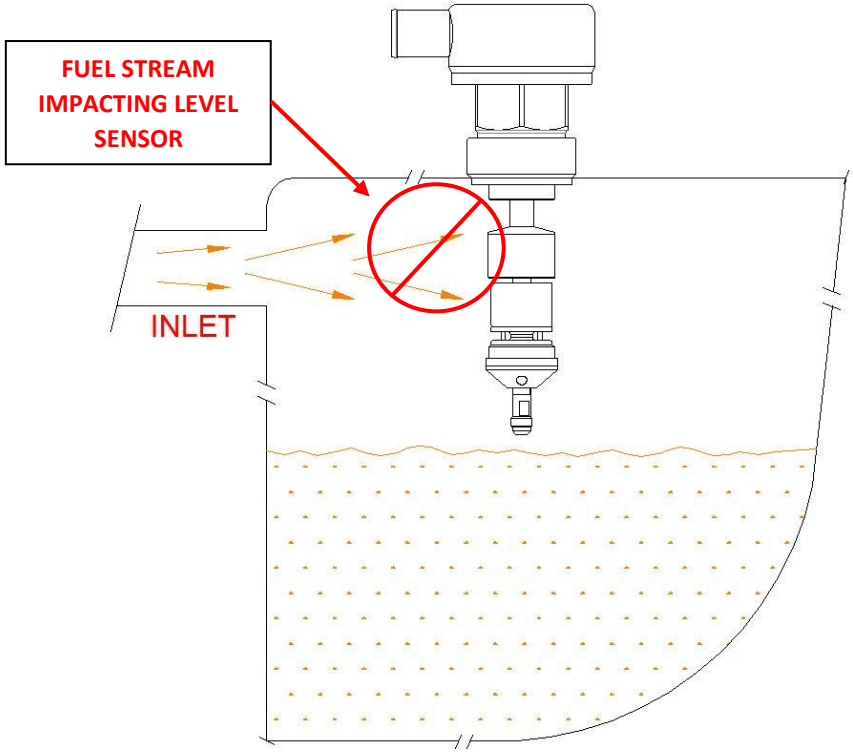

Figure 18 - Incoming Fuel Stream Impacting Level Sensor

5.1.4 Dual Flow Control Valves and Common BVLS Series Level Sensor

For tanks with dual (2) refuelling lines, a single (common) BVLS series Level Sensor can be configured as per Figure 19 using either;

- Pair of check valves, each with internal bleed (balancing) port, or;
- Shuttle valve (T-port) with internal (balancing) ports.

Importantly, **only a single refuelling point can be used at any one time.**

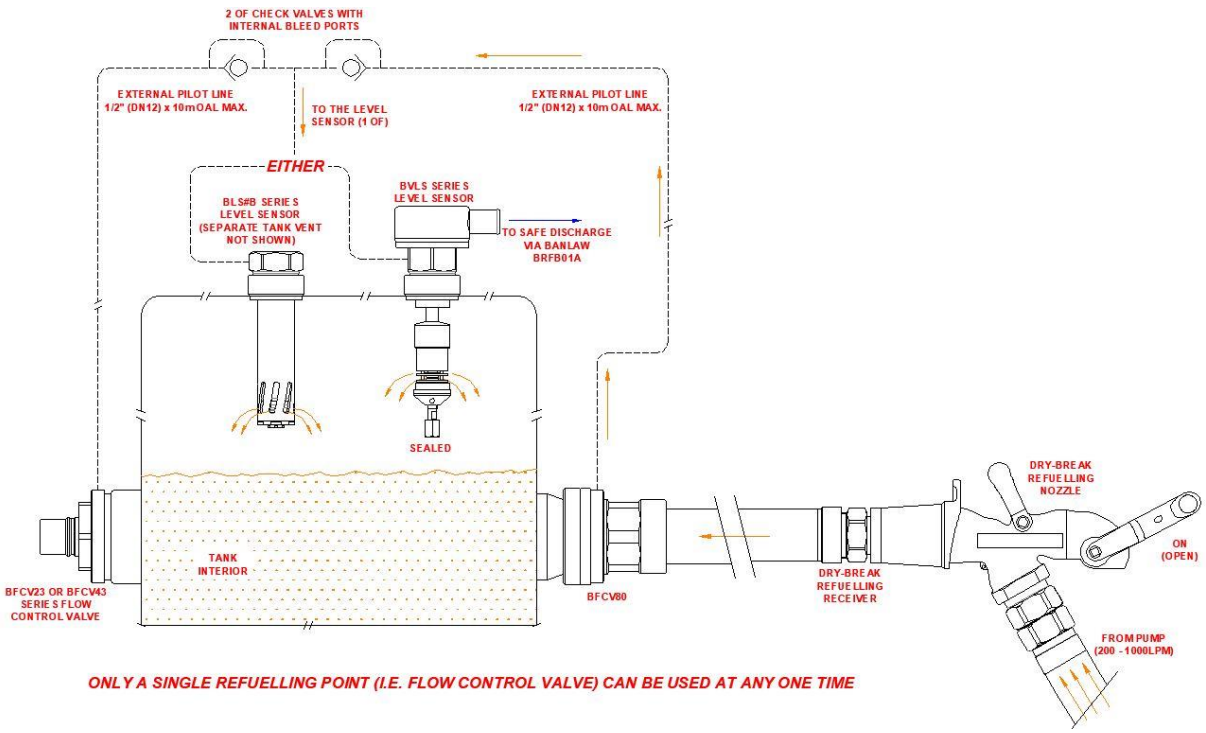

Figure 19 - Common BVLS Level Sensor with Dual Flow Control Valves (2 Fill Points)

5.1.5 Applications with Multiple Tanks

Some plant equipment incorporate multiple fuel tanks with a variety of refuelling options. Figure 20 illustrates an example of a single refuelling point connected to 3 series-connected tanks.

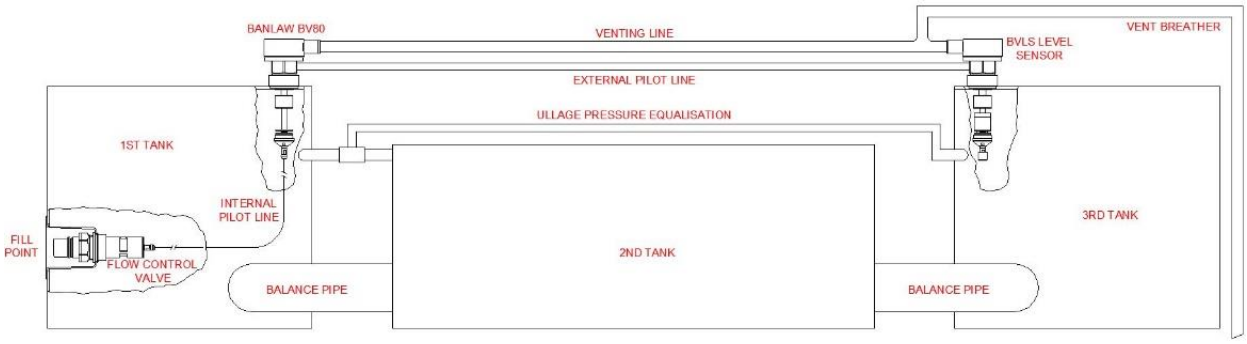

Figure 20 - Example of Multiple Series-Connected Tanks

Due to the variety of multiple tank configurations, end-users are asked to contact Banlaw to confirm the correct specification of FillSafe Zero equipment *prior* to installation.

5.2 Installation Procedure

CAUTION

The BVLS Level Sensor incorporates components which are susceptible to damage if improper storage, handling and overall care is not conducted during pre-installation and installation. Components particularly sensitive to damage include the ***Balance Element*** and ***Vent Float***. Damage sustained to Level Sensor components may cause the improper, unsafe and unreliable operation of the Level Sensor and FillSafe Zero system. Damage due to abuse, improper handling, neglect or tampering will void any Banlaw warranty claim.

1. Complete all necessary hazard mitigation, monitoring and control actions as per the JHA.
2. Once the tank is ready to accept the new BVLS model Level Sensor, remove the Level Sensor from its packaging (leave within packaging until just prior to install). Remove any thread covers and other packaging materials. Carefully inspect the assembly for any damage or defects.
3. Using only ***gentle*** hand movement, actuate the Balance Element and Vent Float to ensure freedom of movement. It is imperative these components reciprocate ***freely*** on the central tube under the effect of gravity.
4. ***Internal*** **Pilot Line Connection;** Inspect the Banlaw Internal Pilot Line and Level Sensor Pilot Line connection for visual damage or defects. If condition is unsatisfactory, do ***NOT*** attempt to repair a damaged Pilot Line – instead replace with a genuine Banlaw replacement Pilot Line assembly;
    a. A piece of cord/rope can be used to hold the Pilot Line – refer Figure 23. Ensure this cord is removed ***prior*** to installing the Level Sensor.
    b. Remove the threaded cap from the internal pilot line JIC connection – refer Figure 21. **Ensure the threaded plug for the *external* pilot line is installed (sealed)** – refer Figure 2.

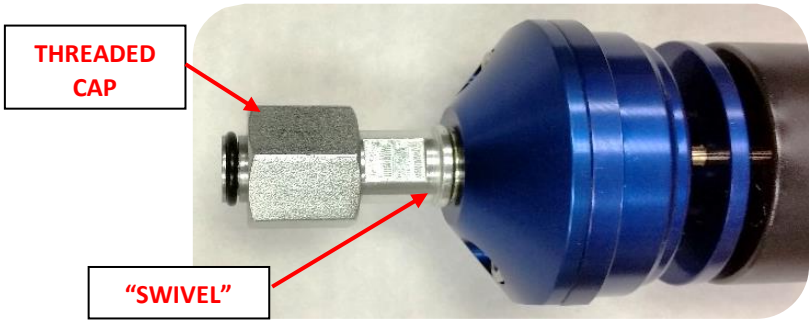

Figure 21 - Internal Pilot Line Connection Plug

c. Verify 9/16" JIC (M) pilot line connection at base of Level Sensor "swivels" (rotates) when moderate torque is applied by hand. If jammed or excessive torque is required, do ***NOT*** install the Level Sensor but instead replace the Level Sensor assembly and return the faulty assembly to Banlaw for warranty assessment. Excessive torque is likely to cause twisting, distortion and possible damage to an internal Pilot Line.

d. Using suitable hand tools – i.e. 19mm and 10mm spanners – secure the Pilot Line to the Valve – refer Figure 22. ***Tighten securely but do not overtighten***. Typical recommended tightening procedure (torque) for a 9/16" JIC connection is; hand tighten firmly (up to wrench resistance), then tighten using hand tools by an additional 1.5 hex flats (i.e. 90°).

Figure 22 - Tightening Internal Pilot Line Connection

Figure 23 – Temporary Cord Holding Pilot Line during Connection with Level Sensor

e. Apply thread sealant – e.g. Loctite 567 – ***sparingly*** to the 2" NPT (M) thread of the Level Sensor. Ensure the mating 2" NPT (F) port on the tank is in good condition, clean,

dry and free from any debris and contamination. Align the Level Sensor concentrically with the port and carefully install the Level Sensor and attached Pilot Line into the tank port. Using a 63.5mm AF spanner – tighten into the port as per;

i. Hand tighten firmly.
ii. Tighten by no more than an additional 6.5mm (1/4") thread length.

Note:

- Avoid overtightening.
- Do ***NOT*** use power tools, i.e. impact wrenches etc.
- Avoid the use of stilson's and wrenches which are more likely to damage the Level Sensor.

5. ***External*** **Pilot Line Connection;** Inspect the Banlaw External Pilot Line and Level Sensor Pilot Line connection for visual damage or defects. If condition is unsatisfactory, repair or replace the damaged components.
   a. **Confirm the threaded cap on the *internal* pilot line connection is secured** – refer Figure 21. Do ***NOT*** install the Level Sensor if this cap is absent or loose (unsealed or leaking).
   b. Install the BVLS Level Sensor as per step 4e above.
   c. Remove the ¼" NPT Plug from the Level Sensor Body – refer Figure 2.
   d. Apply thread sealant – e.g. Loctite 567 – ***sparingly*** to the ¼" NPT (M) thread of the threaded nipple, and install into the external Pilot Line Port. Tighten but do not overtighten.
   e. Install the threaded hose-tail (i.e. ¾" JIC-F) onto the nipple, and tighten securely.
   f. Confirm the external Pilot Line is in good working order and properly secured – refer example in Figure 14 utilising magnetic hose clamps.

5.2.1 Tank Internal Pressure Indicator - Optional

The BVLS model Level Sensors incorporate a 1/8" NPT (F) port on the Body of the Level Sensor – refer Figure 2. ***With the FillSafe Zero system fully operable, the refuelling of the tank should generate no measurable internal pressurisation.*** The purpose of the (optional) pressure indicator feature of the BVLS model Level Sensor is for the measurement and monitoring of internal tank pressurisation, particularly in the event;

1. The FillSafe Zero system fails.
2. The ***unfiltered*** (free to atmosphere) or ***filtered*** breather hose/system fitted to the Level Sensor is creating excessive restriction to the ***discharge*** of air from the tank during refuelling.

For the pressure indicator to be beneficial, the indicator itself ***must be installed in a location readily accessible and visible to the operator***. Due to the often elevated and remote installed location of a Level Sensor from the tank refuelling point (e.g. dry-break fuel receiver or FillSafe Zero Flow Control Valve), it will be necessary to install the pressure indicator at the desired location and link (connect) it with the Level Sensor using a suitable flexible or rigid pressure sensing line, e.g. flexible hose or metal tubing (minimum 1/8", DN3).

Any pressure indicator used – i.e. mechanical or electronic pressure gauge – must incorporate a ***maximum reading indicator***, e.g. a "drag pointer" on a mechanical gauge, so that the maximum internal tank pressure reading can be observed at a time ***after*** the tank has been pressurised.

5.2.2 Tank Venting – Level Sensor Intake/Exhaust

Two basic styles of tank venting system are used;

1. Unfiltered (free to atmosphere).
2. Filtered (specifically for air ***entering*** the tank).

The ***discharge*** location of exhaust air from a tank must be in a location;

1. Away from potential ignition sources, e.g. turbochargers, engine exhausts, etc.
2. Less prone to the build-up of contamination, e.g. mud, snow, etc.
3. Readily visible to – but not directed towards – the refuelling operator.

The use of a breather hose (minimum 1-1/4", DN31) from the Level Sensor intake & exhaust port to the desired discharge location will ensure the above criteria are met.

Most common diesel engine OEM's recommend or mandate the ***effective filtration or airflow entering a diesel engine fuel tank*** via the tank vent(s). Typically the required micron rating of the filter element is no greater than ***3µm (abs.)***. Please contact Banlaw for advice on the most appropriate filtered breather solutions for your specific FillSafe Zero applications.

5.3 COMMISSIONING

For a new and ***complete*** FillSafe Zero installation, please refer to the commissioning guidelines within the ***Banlaw FillSafe Zero Flow Control Valve Product Data Sheet (PDS)*** and other FillSafe Zero reference documentation (contact Banlaw).

For the replacement of a FillSafe Zero BVLS model Level Sensor, the FillSafe system should require no further commissioning. It is however recommended the initial (first) operation of the system incorporating the new Level Sensor is closely monitored to ensure the system operates properly and that no fuel leaks occur from process connections completed during this installation.

6 MAINTENANCE & SERVICING

The Banlaw BVLS model Vented Level Sensor is a ***non-serviceable*** product. No attempt shall be made to repair, service or tamper with the product. Should the Vented Level Sensor malfunction, promptly contact Banlaw or your nearest Banlaw Distributor. Visit www.banlaw.com for warranty details and a full list of distributors near your area to source replacement parts.

The following preventative maintenance guidelines apply to the BVLS model Level Sensors;

1. Ensure adequate controls and condition monitoring are in place to ensure the contamination levels (and other specifications) of your fuel supply are maintained – ***PREVENT*** poor quality fuel entering your site's fuel infrastructure and plant equipment.
2. Install inline (bulk) filtration on all diesel dispensing lines – contact Banlaw for advice.
3. Maintain the use of the Receiver Dust Cap and Nozzle Anchors, Holsters, or Dust Caps.
4. Remove any contamination from the dry-break Receiver (refuelling coupler) ***prior*** to connecting a refuelling Nozzle.
5. Ensure tank breather ports are routinely inspected and cleaned or contamination. Inspect filtered breather systems for condition, and renew filter elements as required.
6. Replace the BVLS Level Sensor assembly no later than every 5 years.
7. Routinely inspect the external Pilot Line for kinking, distortion (e.g. flattening), leakage and other damage. Repair/replace as necessary.
8. Replace the Internal Pilot Line no later than every 2 years.

6.1 Banlaw Site Service Level Agreement (SLA)

Clients can benefit from a **Banlaw Service Level Agreement (SLA)** to assist in the preventative and corrective maintenance of a FillSafe Zero system onsite, in addition to other diesel, fuels, oils and coolant infrastructure. Clients with an SLA can *focus on their core business activities* and allow experienced Banlaw technicians and engineers to help keep such infrastructure operating at optimum ***safety, performance and reliability.***

7 TROUBLESHOOTING

For further troubleshooting guidelines, please refer to the ***Banlaw FillSafe Zero Flow Control Valve Product Data Sheet (PDS)*** and other FillSafe Zero reference documentation (contact Banlaw).

PROBLEM	PROBABLE CAUSE AND SOLUTION
Premature nozzle shut-off at the *start* of or *during* the refuelling.	• Zero system requires bleeding (to remove air). With the supply pump running, cycle nozzle T-handle between ON and OFF several times to resolve this issue (also refer section 5.3). • Residual pressure in Pilot line. Cycle nozzle T-handle between ON and OFF several times to resolve this issue. • Pilot line blocked/obstructed, kinked or undersized. Check Pilot line size and connections for blockages or obstructions. Avoid the use of restricted bore style fittings, sharp elbows etc. within the Pilot Line routing between the Flow Control Valve and Level Sensor. • Level Sensor installed too high (over 4m (13')) above the Flow Control Valve). • The BVLS model "venting" Level Sensor is not installed correctly onto the tank, e.g. installed within an "extended" socket or riser pipe etc. Refer section 5.1. • Float Valve at base of Level Sensor is "stuck" in the closed (up) position. Remove Level Sensor, investigate, identify root cause and rectify. • Faulty Level Sensor. Replace Level Sensor. • Fuel flow out of the Flow Control Valve outlet ports is "choked" – i.e. the Valve is installed within a pipe, extended socket, etc. or installed too close to the side of the tank or internal tank baffle (plate). Refer the relevant Valve PDS document. • Piston mechanism within Flow Control Valve is "stuck" in the closed (forward) or otherwise restricted in its "free" reciprocating action. Remove Valve, investigate, identify root cause and rectify. • Faulty Flow Control Valve. Replace Flow Control Valve. • Flow rate below recommended minimum. Increase delivery flow rate. • Flow rate above recommended maximum. Reduce delivery flow rate. • The shut-off setting of the nozzle & receiver *combination* is too "low" (i.e. too light) for this application. Contact Banlaw or your nearest Banlaw agent for advice. ○ Unless instructed otherwise, Banlaw recommends a fuel Receiver with a *"Light"* spring setting when used with a FillSafe Zero system. • Faulty nozzle. Replace nozzle.

	• Excessive restriction to the "free" discharge of air from the tank's venting (breather). Check vent(s), vent exhaust, breather hose, and filtered breather system (if fitted) for the source of the restriction. Also confirm the venting system is rated for the tank refuelling flowrate. • Excessive restriction in the refuelling line connecting the Receiver to the Flow Control Valve. Upsize line size (bore) and remove short radius bends and unnecessary chokes to fuel flow. • Accidental/premature activation (closure) of the Level Sensor by fuel movement (sloshing) in the tank. Pause for 1 min and restart refuelling.
Nozzle shut-off and/or Flow Control Valve closure as tank approaches SFL (capacity).	• Accidental (premature) trigger of the Level Sensor by fuel movement in the tank. Pause for 1 min (60 seconds) to allow fuel to settle and try again. • Incorrect Level Sensor for the required ullage. Contact Banlaw or your nearest Banlaw agent for advice.
Fuel discharged from vent outlet during refuelling	• Fuel discharge from Flow Control Valve is impacting the tank venting passage – refer section 5.1.3.
Tank overfilling	• Incorrect Level Sensor (length) for the required ullage – refer section 5.1.1. • Leakage from Pilot Line and/or connections. Check Pilot line and connections. • Float Valve within Level Sensor has failed to close. Remove Level Sensor, investigate, identify root cause and rectify. • Faulty Level Sensor. Replace Level Sensor. • Piston mechanism within Flow Control Valve is "stuck" in the open (rearward) or otherwise restricted in its "free" reciprocating action. Remove Valve, investigate, identify root cause and rectify. • Faulty Flow Control Valve. Replace Flow Control Valve. • Flow rate below the recommended minimum. Maintain flowrate within the recommended minimum and maximum range. • Excessive foaming of the diesel fuel during refuelling – refer Valve PDS document for guidance.
Fluid Leakage between Nozzle and Receiver during Refuelling	• Worn Receiver and/or Nozzle preventing effective locking of Nozzle to Receiver. Install new Receiver Kit or replace and/or Nozzle. • Dirt and debris interfering with locking action and/or fluid seals. Clean both Nozzle and Receiver and ensure that the Receiver Dust Cap and Nozzle Plug are always used. • Front face of Receiver is damaged. Install new Receiver Kit. • Seals worn out on Nozzle. Replace Nozzle and return to an authorised Banlaw nozzle repair agent for servicing.
Fluid Leakage From Flow Control Valve – around Receiver	• Worn O'Ring between Receiver and adjacent Flow Control Valve Body. Install new Receiver Kit.

Fluid Leakage from front of Receiver	• Worn Poppet Seal in Receiver or debris on Seal. Remove Receiver sub-assembly and inspect seal. If damaged, install new Receiver Kit.
Nozzle accidently uncouples from Receiver during refuelling	• Incorrect combination of Nozzle and Receiver. Confirm compatibility. **Only use the correct combination of Nozzle and Receiver.** • Worn ball lock mechanism on Nozzle and/or Receiver. Inspect both equipment and replace if necessary. • Contamination within ball lock groove on receiver body. Clean thoroughly and reconnect nozzle. • Nozzle improperly coupled to Receiver. Try again.
Fuel drains from Tank via the Flow Control Valve	• The Piston within the Flow Control Valve is not designed nor intended to act as a normally closed check (one way) valve. Fuel must be drained within the tank to a level below the Valve prior to installing or removing the Valve or a Receiver Front End Kit.
No fuel issued via Nozzle	• Supply (source) tank is empty, or valve on fuel dispensing line closed. • Banlaw FuelTrack receiver ID tag (code) has not been entered into the onsite FMS database and/or properly configured within the database. • Banlaw FMS is installed at fuel dispensing location, but a non-Banlaw "Auto ID" Receiver is installed on the tank refuelling point. Contact Site Management • FuelTrack receiver ID tag has not been received by local FMS depot; a. Existing fault with auto ID dry-break system – investigate and rectify. b. Faulty auto ID chip in receiver – install new Banlaw receiver kit. c. Turn nozzle on (open) and verify code is read. d. Contact your onsite FMS "champion" or Banlaw Helpdesk.

8 PRODUCT RECYCLING & DISPOSAL

Banlaw values and supports the sustainable use of resources, and the safe, responsible and proper disposal or recycling of all materials within its products. For a description of the principal materials within the Banlaw FillSafe Zero system, please refer to section 4.

9 PRODUCT WARRANTY

Banlaw is committed to providing quality products and services. To provide further assurance, our products and services are backed by generous warranties.

A copy of the Banlaw product warranty terms and conditions is available from Banlaw, the Banlaw website, or your nearest authorised Banlaw agent.

BANLAW OFFICES

AUSTRALIA / PACIFIC		AMERICAS / INTERNATIONAL
HEAD OFFICE	WESTERN AUSTRALIA	NORTH AMERICA
Phone +61 2 4922 6300	Phone +61 8 9209 1351	Phone 1 385 259 0456
Fax +61 2 4920 6171	Fax +61 8 9209 1616	Email americasales@banlaw.com
Email sales@banlaw.com	Email sales@banlaw.com	537 West 600 South #800
19 Metro Court	1/16 Oxleigh Drive	Salt Lake City
Gateshead NSW 2290	Malaga WA 6090	Utah 84101
Australia	Australia	USA

Website – www.banlaw.com