Banlaw Product Catalogue

BANLAW

Liquid Asset Intelligence

Published: 05/09/2019

Use the Home Button to return to this page at any time.

Chapter Tab

Use the chapter and subchapter buttons to navigate back to the start of each section

! This document is designed to work best when downloaded, and viewed using Adobe Reader

Search

If you have downloaded this file, then you can use the search field then click the search button to find product numbers or keywords across the entire catalogue.

Contents

Click on any subject to go directly to that page

A word from the Managing Director ... 3

System Diagrams ... 4
- Refuelling ... 4
- Underground Refuelling ... 5
- Mechanical Overfill Protection ... 6
- Electronic Overfill Protection ... 6

Refuelling ... 7

Dry Break Nozzles ... 8
- 800 Series Nozzle ... 9
- 1000 Series Nozzle ... 10
- Underground Nozzle ... 11

Dry Break Receivers ... 12
- 800 Series Receiver ... 13
- 1000 Series Receiver ... 14
- Underground Receiver ... 15
- Check Valve Receiver ... 16

Shells ... 17
- Bolt Mount Shell ... 18
- Weld Mount Shell ... 18

Vents ... 19
- Unfiltered ... 20
- Unfiltered - Low Profile ... 21
- Filtered 10µm ... 22
- Fine Filtered 3µm ... 23
- Remote Breather 3µm ... 24

Swivels ... 25
- Dry Break Swivel ... 26

Break Away Valves ... 27

Fluid Transfer ... 28

Classic ... 29
- Coolant ... 30
- Crankcase ... 31
- Hydraulic ... 32
- Transmission ... 33
- Push-to-Connect ... 34
- R Series ... 35
- Grease ... 36

Flush Face ... 37
- Evacuation ... 38
- Bulk Fluid Transfer ... 39
- Grease Transfer ... 40
- Size 0 - Silver ... 41
- Size 1 - Brass ... 42
- Size 2 - Gold ... 43
- Size 3 - Red ... 44
- Size 4 - Black ... 45
- Size 5 - Green ... 46
- Size 6 - Blue ... 47
- Size 7 - Purple ... 48
- Size 8 - Platinum/Grey ... 49
- Size 9 - Bronze/Tan ... 50
- Size 10 - Orange ... 51
- Size 11 - Silver ... 52

Overfill Protection ... 53

FillSafe Power ... 54
- Controller ... 55
- Level Switch ... 57
- Electric Actuated Valve ... 58

FillSafe Zero ... 59
- Flow Control Valve 2” ... 60
- Flow Control Valve 3” ... 61
- Flow Control Valve 4” ... 62
- Level Sensor ... 63
- Non-Level-Sensing Vent ... 64
- Vented Level Sensor ... 65
- Pilot Line ... 66

Fuel Management ... 67
- Dry Break Auto ID ... 68
  - Dry Break Nozzle - Auto ID ... 69
  - Dry Break Receiver - Auto ID ... 70
  - Swivel - Auto ID ... 71
  - Break Away Valve - Auto ID ... 71
  - Fillsafe Zero - Auto ID ... 71
- Splash Fill Auto ID ... 72
  - Splash Fill Nozzle - Auto ID ... 73
  - Splash Fill Ring - Auto ID ... 74

Tools, Replacement Parts & Accessories ... 75

Tools ... 76
- Refuelling Tools ... 76
- Fluid Transfer Tools ... 76
- Overfill Protection Tools ... 76

Replacement Parts ... 77
- Refuelling Kits ... 77
  - Refuelling Receiver Cap ... 77
  - Nozzle Spare Parts ... 77
  - Break Away Valve Repair Kit ... 77
  - Check Valve Receiver Kit ... 77
  - Vent Servicing Kit ... 77
- Overfill Protection Kits ... 78
  - Control Valve Servicing Kit ... 78

Accessories ... 79
- Refuelling Accessories ... 79
  - Dry Break Nozzle Adaptor ... 79
  - Vent Adaptor ... 79
  - Break Away Valve Hose Adaptor ... 79
  - Splash Fill Swivel ... 79
  - Dry-Break Nozzle Holsters and Anchors ... 80
- Fluid Transfer Accessories ... 81
  - Receiver Cap - Fluid Transfer ... 81
  - Nozzle Cap - Fluid Transfer ... 82
- Fuel Management Accessories ... 82
  - Splash Fill Gateway Terminal ... 82
  - Splash Fill Coil Clamps ... 82
  - Splash Fill AutoID Nozzle Chip Reader ... 82

Key

Throughout this document, on the right-hand edge of tables, these icons provide quick visual indication of the following: Rail specific products ❄ Cold temperature specific products

A word from the Managing Director

Thank you for your interest in Banlaw's products.

We've been creating premium-quality solutions for liquid transfer, measurement, and control for 40 years. With well over 500 products in this catalogue spanning Refuelling, Fluid Transfer, Overfill Protection, and Fuel Management, we've got you covered.

The Banlaw team is highly focused on managing and mitigating your risk and solving your fluid transfer problems; so if you're planning a tricky install, or you just don't know which item to choose, give us a call.

Banlaw are serious about safety, contamination control, and maximising your productivity. Don't risk your employee and equipment safety by purchasing inferior parts. Using quality Banlaw products means less risk to your business. Our hard-wearing products help you to refuel and service machines **Cleaner, Faster, Safer!**

We are the refuelling specialists. Don't risk it - call us!

Yours in refuelling safety,

Bill Clifton

With Banlaw products you can rest assured that every drop will end up where you need it.

Banlaw's hard-wearing products help users of industrial fluids to refuel and service machines safely, cleanly, and quickly.

Our products are trusted by mining, railway, construction, and haulage companies the world over.

System Diagrams

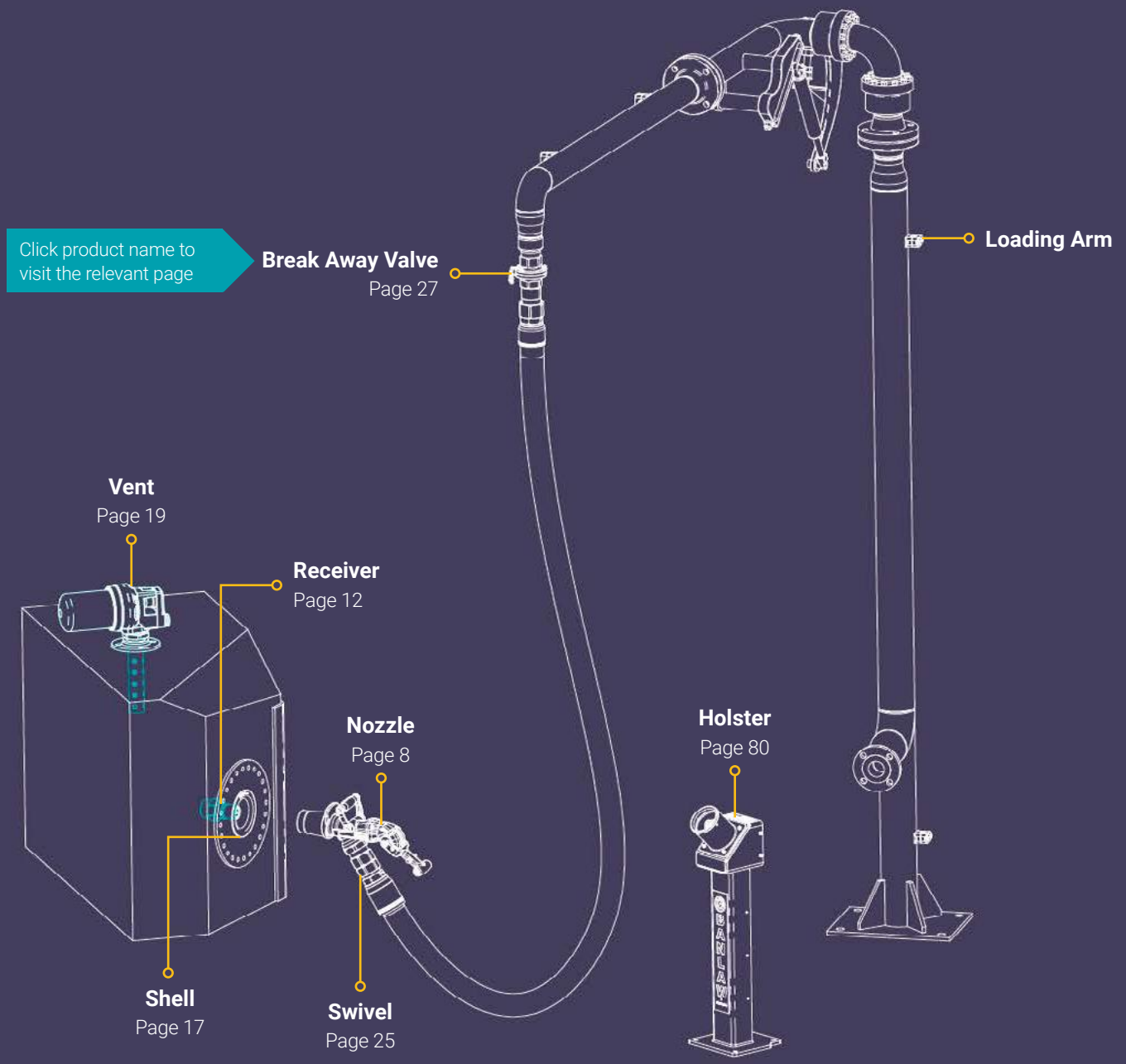

Refuelling - Page 7

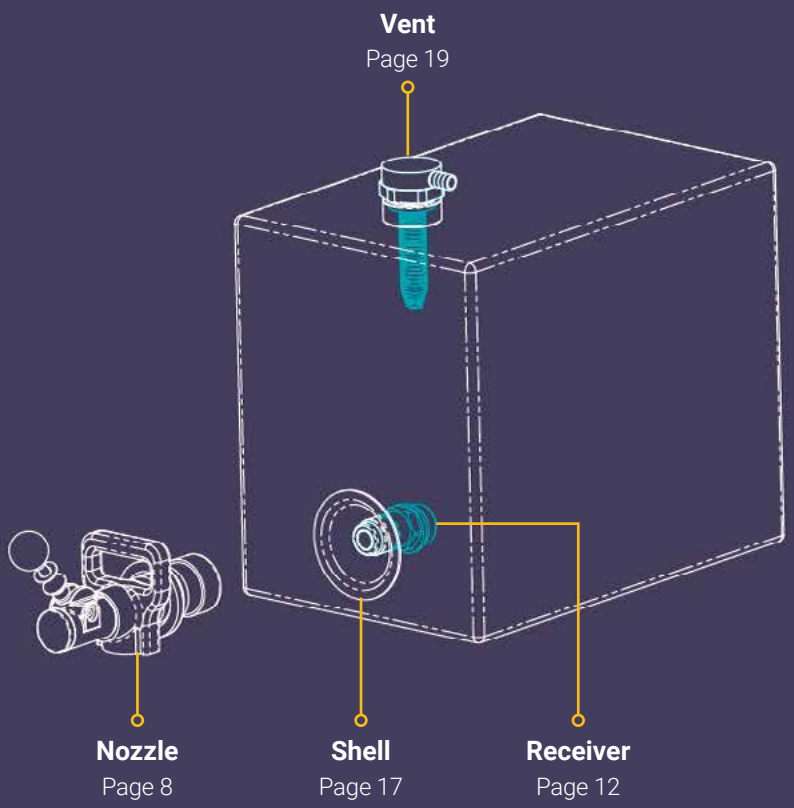

Underground Refuelling - Page 11

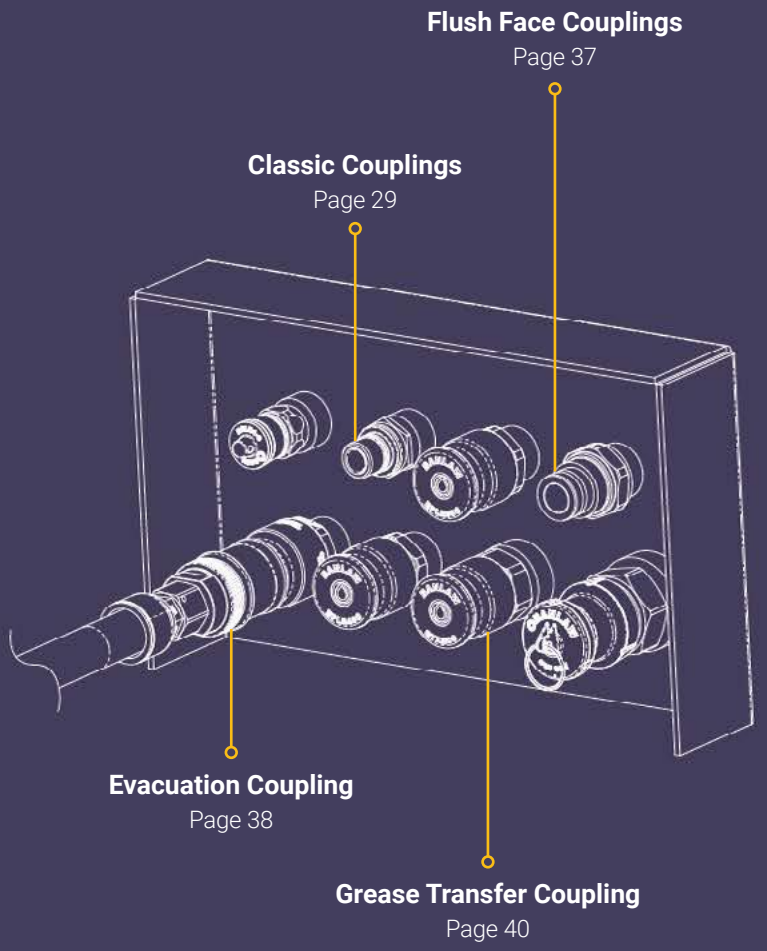

Fluid Transfer - Page 28

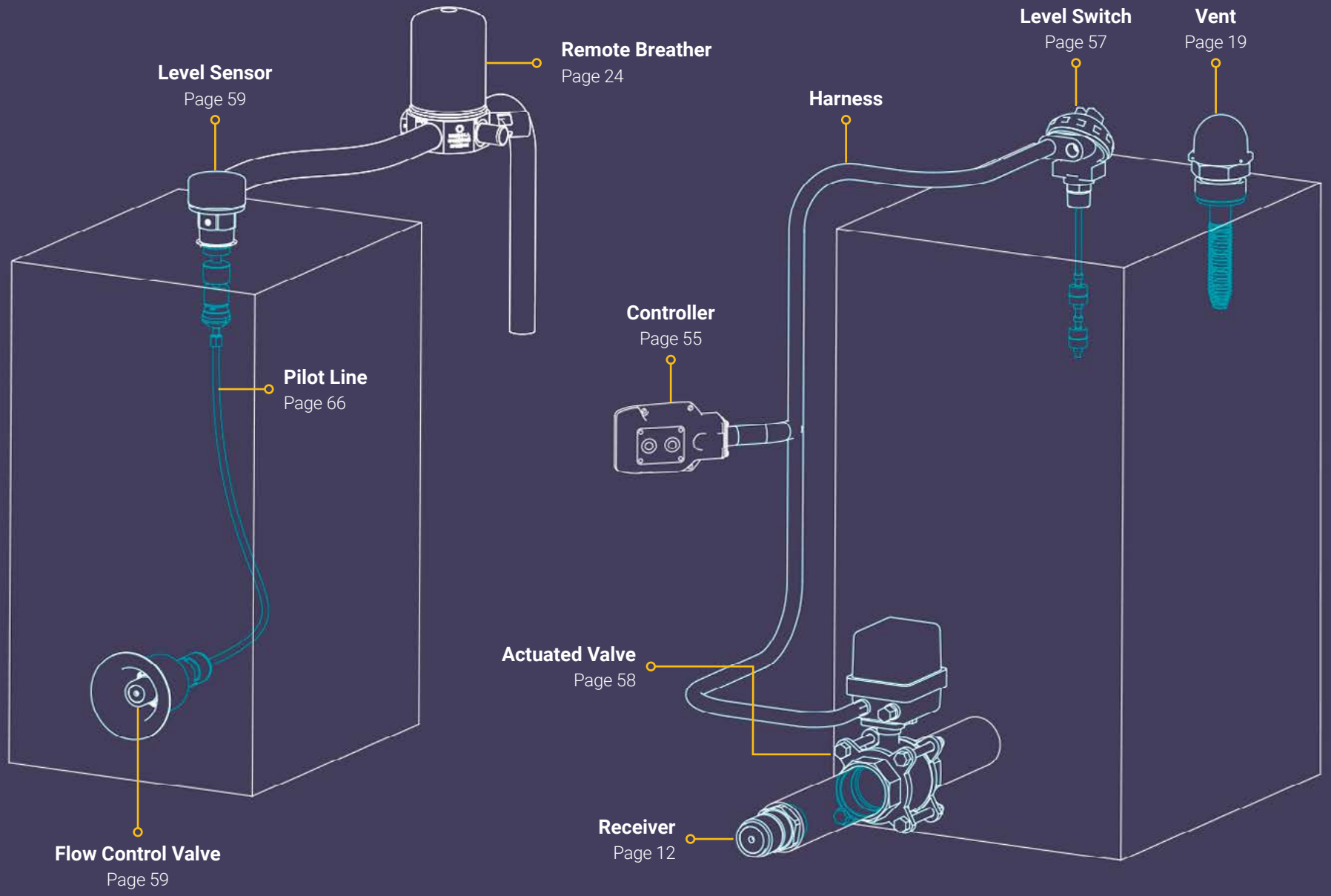

Mechanical Overfill Protection - Page 59

Electronic Overfill Protection - Page 54

Refuelling

Banlaw refuelling products have provided users with industry-leading flow rates, durability, and operator safety for 40 years.

Our Dry Break refuelling equipment is the most reliable on the market.

Go to

Dry Break Nozzles | Dry Break Receivers | Shells | Vents | Swivels | Break Away Valves

Dry Break Nozzles

Banlaw refuelling nozzles offer the highest reliable flow rate capability, and have a proven safety record.

The dependable ball locking mechanism ensures our nozzles cannot 'fly off', and Dry Break design minimises leaks and spills.

Our nozzles are predominantly of all-metal construction which dramatically extends their serviceable life.

A global network of Authorised Nozzle Repairers means timely and cost-efficient repair and refurbishment services are always close at hand, ensuring superior total cost of ownership.

Flow Rates

800 Series nozzles Flow Rate:
90-800lpm (24-211gpm)

1000 Series nozzles Flow Rate:
400-1000lpm (106-211gpm)

Underground Nozzle Flow Rate:
30-300lpm (8-79gpm)

Go to

800 Series Nozzle

1000 Series Nozzle

Underground Nozzle

Nozzle Spring Settings

Medium – The industry standard pressure setting, most commonly used.

Light – Shuts off when sensing a lighter back pressure, suitable for specialist situations such as filling large thin-walled tanks, where internal pressure must be minimised.

Heavy – Overcomes flow resistance from multiple fuelling components on the machine-side and long remote-fill pipework. Discuss with Banlaw prior to considering heavy nozzles on your site.

Banlaw produce Dry Break Nozzles in a variety of spring settings. This allows refuelling pressure settings for a site, or for a specific machine to be customised, overcoming premature shutoff or other pressure-related issues.

Refuelling problems related to a specific machine should be overcome by changing the receiver, not the nozzle, in most cases.

Left to right: 1000lpm, Hydraulic, Rail, 800lpm (BNM800), Bulk Fill, Underground

800 Series Nozzle

Our 800 Series refuelling nozzles are the natural choice for most high flow, industrial diesel filling applications.

They incorporate automatic shut-off functionality when installed with correctly matched receivers and tank vents, and are suitable for use with diesel fuel.

The 800 Series connects with the most commonly encountered Dry Break receiver size. It is therefore completely interchangeable with other equipment brands, simplifying the process of upgrading to a Banlaw solution.

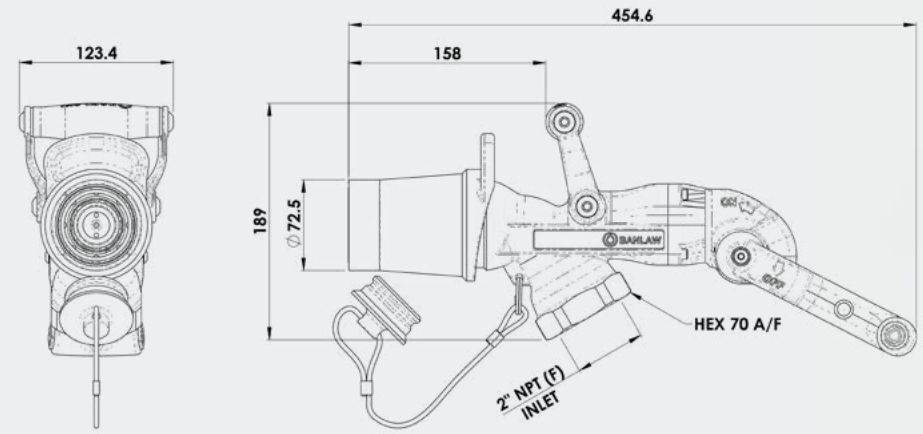

BNM800M

Note: Our Rail and Hydraulic Nozzles will only couple with matched Rail or Hydraulic Receivers. Rail products are specific to that industry.

Part Number	Product Description		Tech Specs	Shipping - Dimensions & Weight	Items Included	
BAMS5	800lpm Series Diesel Refuelling Nozzle - Bulk Fill	*	2" NPTF	27x16x12cm | 2.25kg	Includes Plug	
BARS5	800lpm Series Diesel Refuelling Nozzle - Rail Bulk Fill	*	2" NPTF	27x16x12cm | 2.35kg	Includes Plug	
BAHS5	800lpm Series Diesel Refuelling Nozzle - Hydraulic Bulk Fill	*	2" NPTF	27x16x12cm | 2.25kg	Includes Plug	
BNM800L	800lpm Series Diesel Refuelling Nozzle - Light Spring Setting		2" NPTF, LT	48x20x12cm | 3.9kg	Includes Plug	
BNM800ML	800lpm Series Diesel Refuelling Nozzle - Medium/Light Spring Setting		2" NPTF, MED LT	48x20x12cm | 3.9kg	Includes Plug	
BNM800M	800lpm Series Diesel Refuelling Nozzle - Medium Spring Setting		2" NPTF, MED	48x20x12cm | 3.9kg	Includes Plug	
BNM800MH	800lpm Series Diesel Refuelling Nozzle - Medium/Heavy Spring Setting		2" NPTF, MED HVY	48x20x12cm | 3.9kg	Includes Plug	
BNM800H	800lpm Series Diesel Refuelling Nozzle - Heavy Spring Setting		2" NPTF, HVY	48x20x12cm | 3.9kg	Includes Plug	
BNR800L	800lpm Series Diesel Refuelling Nozzle - Light Spring Setting - RAIL		2" NPTF, LT	48x20x12cm | 3.9kg	Includes Plug	
BNR800ML	800lpm Series Diesel Refuelling Nozzle - Medium/Light Spring Setting - RAIL		2" NPTF, MED LT	48x20x12cm | 3.9kg	Includes Plug	
BNH800L	800lpm Series Diesel Refuelling Nozzle Hydraulic - Light Spring Setting		2" NPTF, LT	48x20x12cm | 3.9kg	Includes Plug	
BNH800M	800lpm Series Diesel Refuelling Nozzle Hydraulic - Medium Spring Setting		2" NPTF, MED	48x20x12cm | 3.9kg	Includes Plug	
BNM800L-CT	800lpm Series Diesel Refuelling Nozzle - Light Spring Setting - Cold Temp		2" NPTF, LT	48x20x12cm | 3.9kg	Includes Plug	
BNM800ML-CT	800lpm Series Diesel Refuelling Nozzle - Medium/Light Spring Setting - Cold Temp		2" NPTF, MED LT	48x20x12cm | 3.9kg	Includes Plug	
BNM800M-CT	800lpm Series Diesel Refuelling Nozzle - Medium Spring Setting - Cold Temp		2" NPTF, MED	48x20x12cm | 3.9kg	Includes Plug	
BNM800MH-CT	800lpm Series Diesel Refuelling Nozzle - Medium/Heavy Spring Setting - Cold Temp		2" NPTF, MED HVY	48x20x12cm | 3.9kg	Includes Plug	
BNM800H-CT	800lpm Series Diesel Refuelling Nozzle - Heavy Spring Setting - Cold Temp		2" NPTF, HVY	48x20x12cm | 3.9kg	Includes Plug	

* No automatic shut off

Replacement parts & kits on page 77

1000 Series Nozzle

Our 1000 Series refuelling nozzles allow your equipment filling speeds to be maximised.

Considered to be the pinnacle in Dry Break, automatic shut-off hardware, these durable nozzles allow fuelling process times to be reduced, enabling significant productivity gains.

Flow rates up to 1,000 litres per minute.

Compatible only with Banlaw 1000lpm 43 series receivers, e.g. BRM43K and BFCV43 Series products.

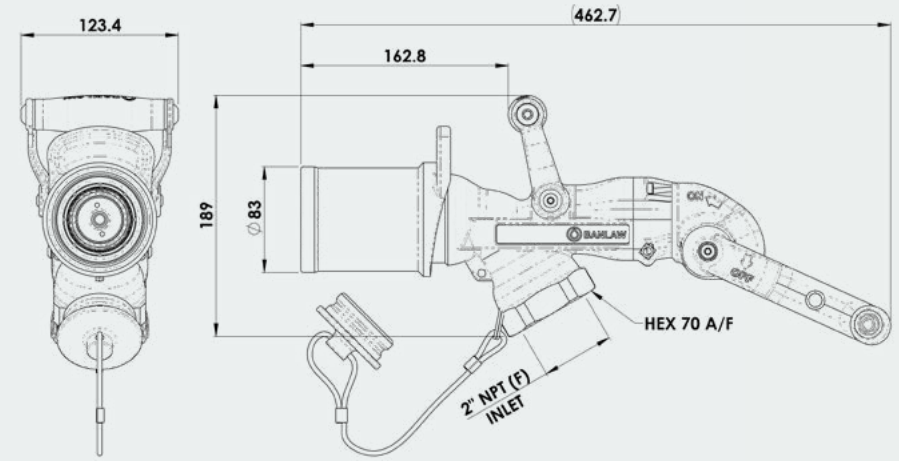

BN1000M

Part Number	Product Description		Tech Specs	Shipping - Dimensions & Weight	Items Included	
BAMS6	1000lpm Series Diesel Refuelling Nozzle - Bulk Fill	*	2" NPTF	27x16x12cm | 2.55kg	Includes Plug	
BN1000ML	1000lpm Series Diesel Refuelling Nozzle - Medium/Light Spring Setting		2" NPTF, MED LT	48x20x12cm | 4.22kg	Includes Plug	
BN1000M	1000lpm Series Diesel Refuelling Nozzle - Medium Spring Setting		2" NPTF, MED	48x20x12cm | 4.22kg	Includes Plug	
BN1000MH	1000lpm Series Diesel Refuelling Nozzle - Medium/Heavy Spring Setting		2" NPTF, MED HVY	48x20x12cm | 4.22kg	Includes Plug	
BN1000H	1000lpm Series Diesel Refuelling Nozzle - Heavy Spring Setting		2" NPTF, HVY	48x20x12cm | 4.22kg	Includes Plug	
BN1000XH	1000lpm Series Diesel Refuelling Nozzle - Extra Heavy Spring Setting		2" NPTF, XHVY	48x20x12cm | 4.22kg	Includes Plug	
BN1000ML-CT	1000lpm Series Diesel Refuelling Nozzle - Medium/Light Spring Setting - Cold Temp		2" NPTF, MED LT	48x20x12cm | 4.22kg	Includes Plug	❄
BN1000M-CT	1000lpm Series Diesel Refuelling Nozzle - Medium Spring Setting Cold Temp		2" NPTF, MED	48x20x12cm | 4.22kg	Includes Plug	❄
BN1000MH-CT	1000lpm Series Diesel Refuelling Nozzle - Medium/Heavy Spring Setting - Cold Temp		2" NPTF, MED HVY	48x20x12cm | 4.22kg	Includes Plug	❄
BN1000H-CT	1000lpm Series Diesel Refuelling Nozzle - Heavy Spring Setting - Cold Temp		2" NPTF, HVY	48x20x12cm | 4.22kg	Includes Plug	❄
BN1000XH-CT	1000lpm Series Diesel Refuelling Nozzle - Extra Heavy Spring Setting - Cold Temp		2" NPTF, XHVY	48x20x12cm | 4.22kg	Includes Plug	❄

* No automatic shut off

Replacement parts & kits on page 77

Underground Nozzle

Specifically-designed for underground refuelling of diesel-powered machines, the Underground Nozzle is Dry Break, offers improved dispensing rates, and is manufactured without aluminium for use in underground coal mines.

Our Underground Nozzle prevents water, mud, and dust from entering fuel tanks, thus reducing engine failures. It supports flow rates of up to 300lpm.

The Underground Nozzle can be configured on site, with variable shutoff pressure settings.

Compatible only with Banlaw AUS46K Receiver.

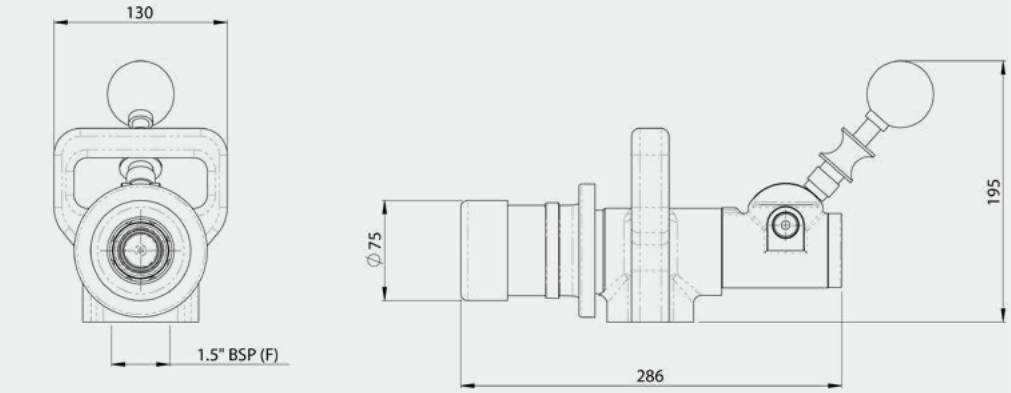

AUS45

Part Number	Product Description	Tech Specs	Shipping - Dimensions & Weight
AUS45	Underground 45 Series Nozzle- 1.5" BSP(F) w/ variable shut off pressure	1-1/2" BSP(F)	35x27x16cm | 4.68kg

Replacement parts & kits on page 77

Dry Break Receivers

Banlaw Dry Break Receivers deliver industry leading performance, safety & durability.

We offer a variety of Dry Break receiver configurations to suit various applications, including our 23 Series 800lpm receivers which are compatible with refuelling nozzles supplied by other OEM's.

Our receivers are manufactured from the highest quality materials, including stainless steel, to ensure they withstand harsh everyday treatment. This makes them less-prone to snapping-off or leaking than receivers made from softer materials.

Go to

- 800 Series Receiver
- 1000 Series Receiver
- Underground Receiver
- Check Valve Receiver

Receiver Spring Settings:

Medium – The industry standard pressure setting. General receiver that is commonly fitted directly to the fuel tank.

Light – Used to help prevent premature nozzle shut off caused by long pipework, elbows, flow control valves, or significant elevation of tank above receiver location.

Heavy – Assists the nozzle to shut off earlier applying less pressure on the tank at shutoff. For tanks prone to overfill, or more sensitive to pressure. Common on sites where heavier nozzle spring settings are the standard.

Refuelling problems related to a specific machine should be overcome by changing the receiver, not the nozzle, in most cases.

Left to right: 1000lpm, Rail, 800lpm (BRM23), Hydraulic, Underground, Caterpillar, Check Valve

800 Series Receiver

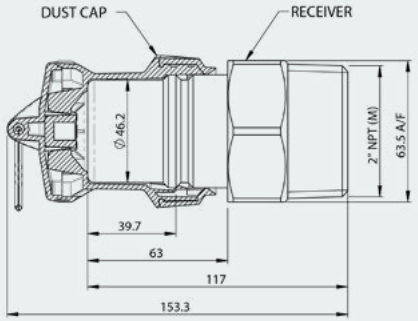

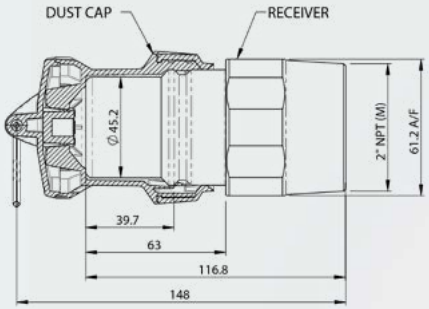

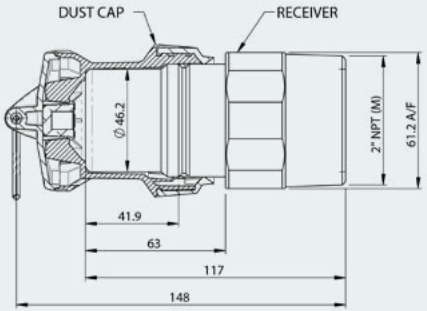

BRM23K

Note: Our Rail and Hydraulic Nozzles will only couple with matched Rail or Hydraulic Receivers. Rail products are specific to that industry.

Part Number	Product Description	Tech Specs	Shipping - Dimensions & Weight	Items Included
AUS23KB	800lpm 23 Series Receiver - Medium Spring Setting - Hydraulic	2" NPTM, MED	15x7x7cm | 1.19kg	Includes Cap
BRM23KL	800lpm 23 Series Receiver - Light Spring Setting	2" NPTM, LT	15x7x7cm | 1.19kg	Includes Cap
BRM23K	800lpm 23 Series Receiver - Medium Spring Setting	2" NPTM, MED	15x7x7cm | 1.19kg	Includes Cap
BRM23KMH	800lpm 23 Series Receiver - Medium/Heavy Spring Setting	2" NPTM, MED HVY	15x7x7cm | 1.19kg	Includes Cap
BRM23KH	800lpm 23 Series Receiver - Heavy Spring Setting	2" NPTM, HVY	15x7x7cm | 1.19kg	Includes Cap
AUS23KR	800lpm 23 Series Receiver - Medium Spring Setting - Rail	2" NPTM, MED	15x7x7cm | 1.139kg	Includes Cap
BRM23KL-CT	800lpm 23 Series Receiver - Light Spring Setting - Cold Temp	2" NPTM, LT	15x7x7cm | 1.19kg	Includes Cap
BRM23K-CT	800lpm 23 Series Receiver - Medium Spring Setting - Cold Temp	2" NPTM, MED	15x7x7cm | 1.19kg	Includes Cap
BRM23KMH-CT	800lpm 23 Series Receiver - Medium/Heavy Spring Setting - Cold Temp	2" NPTM, MED HVY	15x7x7cm | 1.19kg	Includes Cap
BRM23KH-CT	800lpm 23 Series Receiver - Heavy Spring Setting - Cold Temp	2" NPTM, HVY	15x7x7cm | 1.19kg	Includes Cap

Note: Cat receiver (BFT23KCAT) is listed on page 70

Replacement caps on page 77

1000 Series Receiver

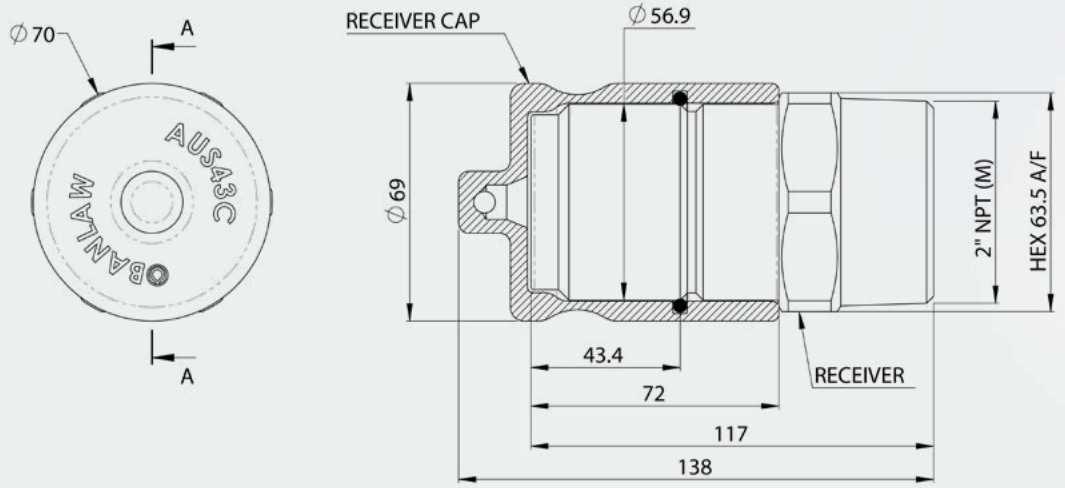

BRM43K

Part Number	Product Description	Tech Specs	Shipping - Dimensions & Weight	Items Included	
BRM43KL	1000lpm 43 Series Receiver - Light Spring Setting	2"NPTM, LT	14x7x7cm | 1.46kg	Includes Cap	
BRM43K	1000lpm 43 Series Receiver - Medium Spring Setting	2"NPTM, MED	14x7x7cm | 1.46kg	Includes Cap	
BRM43KMH	1000lpm 43 Series Receiver - Medium/Heavy Spring Setting	2"NPTM, MED HVY	14x7x7cm | 1.46kg	Includes Cap	
BRM43KH	1000lpm 43 Series Receiver - Heavy Spring Setting	2"NPTM, HVY	14x7x7cm | 1.46kg	Includes Cap	
BRM43KL-CT	1000lpm 43 Series Receiver - Light Spring Setting - Cold Temp	2"NPTM, LT	14x7x7cm | 1.46kg	Includes Cap	❄
BRM43K-CT	1000lpm 43 Series Receiver - Medium Spring Setting - Cold Temp	2"NPTM, MED	14x7x7cm | 1.46kg	Includes Cap	❄
BRM43KMH-CT	1000lpm 43 Series Receiver - Medium/Heavy Spring Setting - Cold Temp	2"NPTM, MED HVY	14x7x7cm | 1.46kg	Includes Cap	❄
BRM43KH-CT	1000lpm 43 Series Receiver - Heavy Spring Setting - Cold Temp	2"NPTM, HVY	14x7x7cm | 1.46kg	Includes Cap	❄

Replacement caps on page 77

Underground Receiver

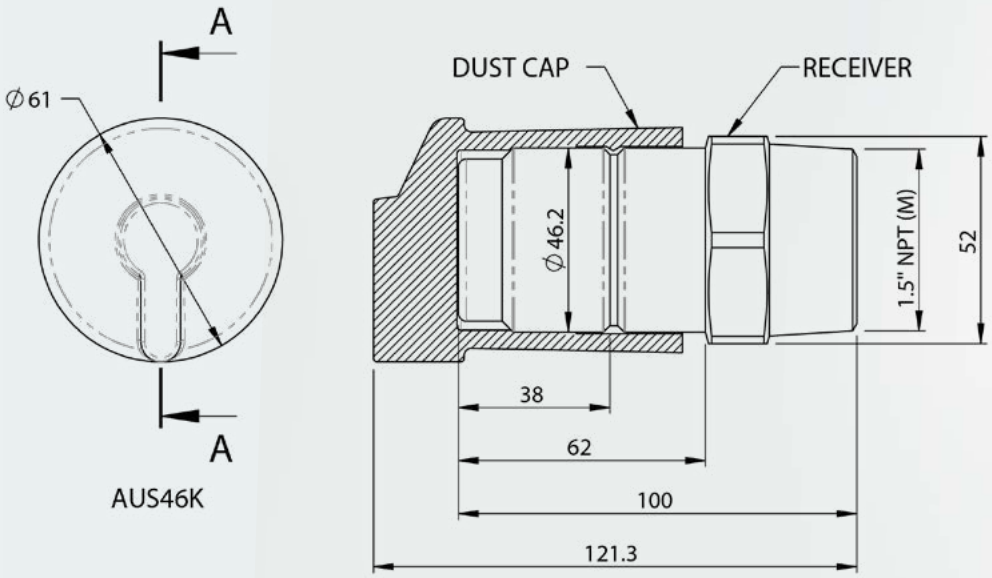

AUS46K

Part Number	Product Description	Tech Specs	Shipping - Dimensions & Weight	Items Included
AUS46K	Underground 46 Series Receiver	1-1/2" NPTM	14x8x8cm | 0.74kg	Includes Cap

Replacement caps on page 77

Check Valve Receiver

Our Check Valve Receiver integrates fuel security along with Dry Break functionality.

It prevents unwanted fuel drainage from the tank which stops theft, and allows for the receiver front-end to be replaced without having to drain the tank first. This saves time on scheduled maintenance, and money because only the worn part is replaced.

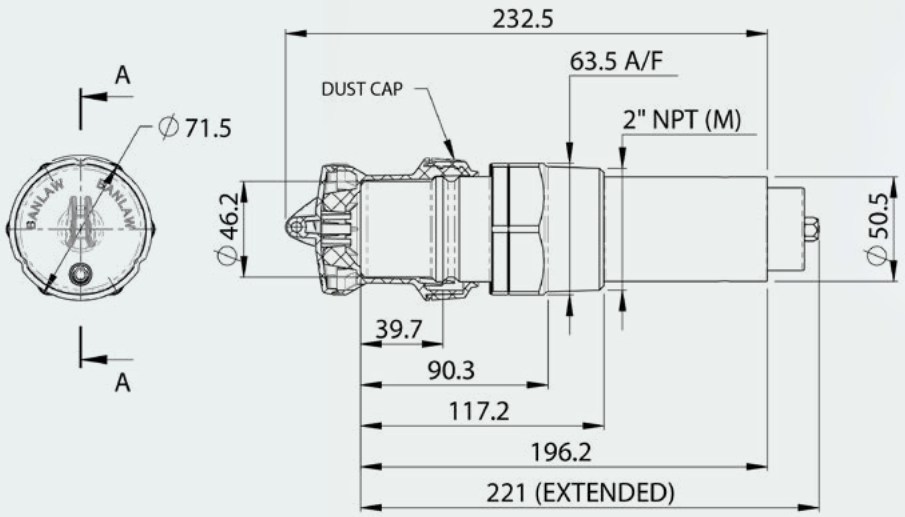

BCVR23KR2

Patented Product (Walnab Pty Limited) – Australia, ARIPO, China, Indonesia, PNG, USA and South Africa.

Part Number	Product Description	Tech Specs	Shipping - Dimensions & Weight	Items Included
BCVR23KR2	800lpm 23 Series Check Valve Receiver- Medium Spring Setting	2" NPTM, MED	23x7x7cm | 1.61kg	Includes Cap
BCVR23KR2-CT	800lpm 23 Series Check Valve Receiver- Medium Spring Setting - Cold Temp	2" NPTM, MED	23x7x7cm | 1.61kg	Includes Cap ❄

Replacement Parts & Kits on page 77

Shells

Banlaw Receiver Shells allow for Dry Break receivers to be recessed into the fuel tank.

This prevents receiver damage from impact, avoiding associated costs and environmental concerns.

Our range of receiver shells are compatible with Banlaw and other industry standard OEM dry-break receivers.

AUS24 & AUS46

Go to

Bolt Mount Shell

Weld Mount Shell

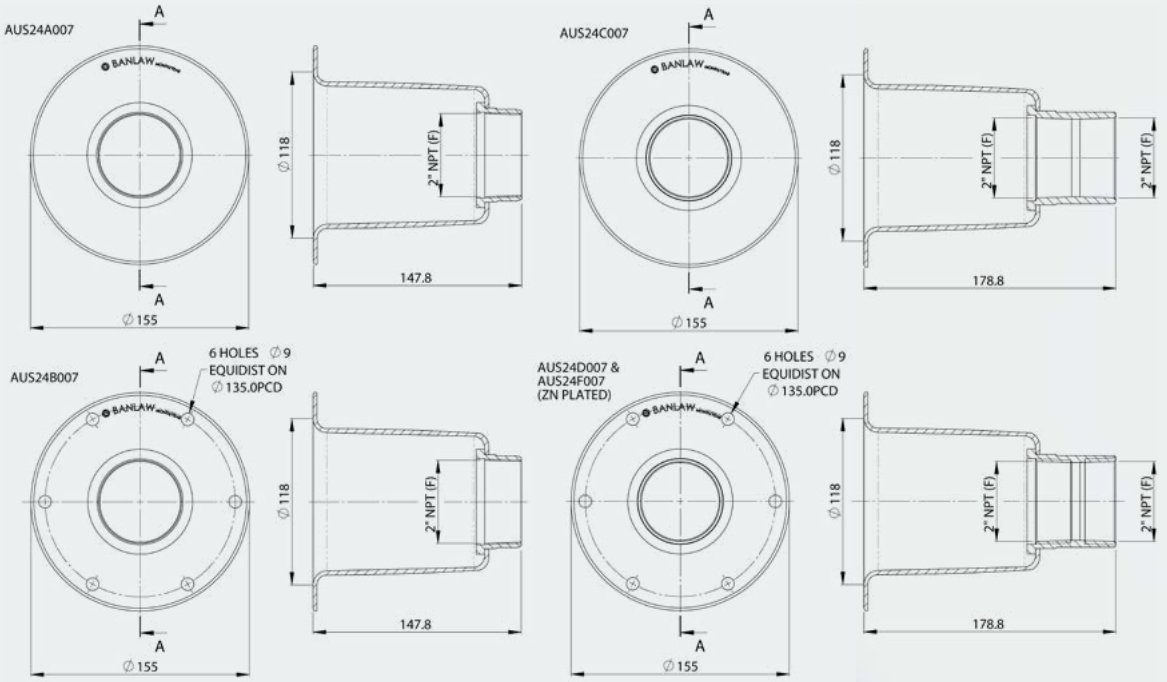

AUS46Shell

AUS24A007

Bolt Mount Shell

Part Number	Product Description	Tech Specs	Shipping - Dimensions & Weight
AUS24B007	Bolt Mount Shell with 2" NPT 1/2 socket	BOLT	16x16x20cm | 1.01kg
AUS24D007	Bolt Mount Shell with 2" NPT full socket	BOLT	16x16x20cm | 1.01kg
AUS24F007	Bolt Mount Shell with 2" NPT full socket (zinc plated)	BOLT	16x16x20cm | 1.01kg

Weld Mount Shell

Part Number	Product Description	Tech Specs	Shipping - Dimensions & Weight
AUS24A	Welded Flush Mount Shell with 2" NPT 1/2 socket plus BRM23K	WELD	16x16x20cm | 2.2kg
AUS24A007	Welded Flush Mount Shell with 2" NPT 1/2 socket (unpainted)	WELD	16x16x20cm | 1.01kg
AUS24C007	Welded Flush Mount Shell with 2" NPT full socket	WELD	16x16x20cm | 1.01kg
AUS46Shell	Welded Flush Mount Shell with 1-1/2" NPT 1/2 socket (unpainted)	WELD	12x12x14cm | 0.82kg

Vents

Banlaw vents are available in unfiltered, filtered, and fine filtered variants.

All Banlaw vents are manufactured with a float valve to shut-off refuelling at a specific ullage.

They are designed to allow air to be released from the fuel tank rapidly during high-speed refuelling, whilst avoiding premature nozzle shut-off, fuel spills and sprays.

Go to

- Unfiltered
- Unfiltered - Low Profile
- Filtered 10µm
- Fine Filtered 3µm

Fine Filtered Vent

Unfiltered

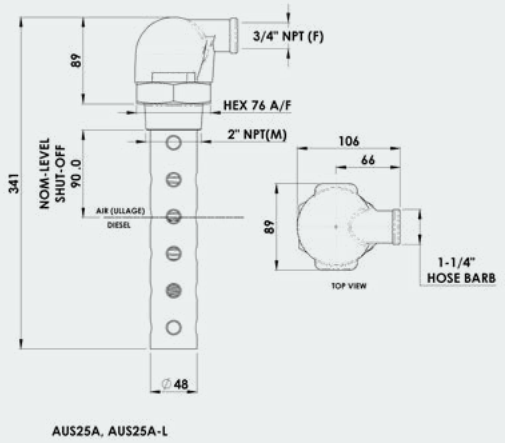

AUS25A, AUS25A-L

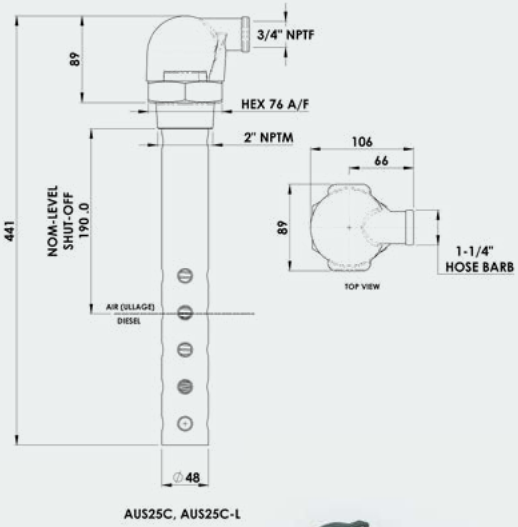

AUS25C, AUS25C-L

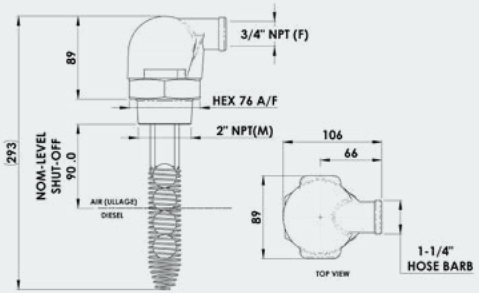

AUS25R

AUS25A

AUS25A-L

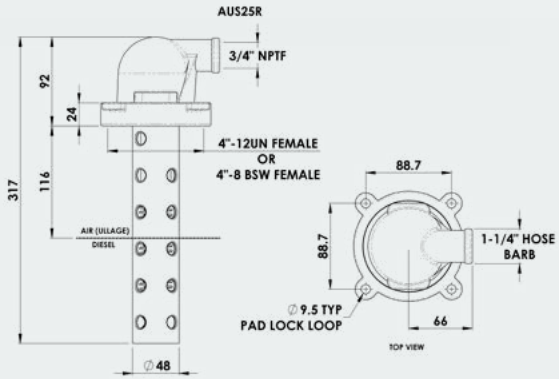

AUS25B

Part Number	Product Description	Tech Specs	Shipping - Dimensions & Weight
AUS25A	Vent Standard Screwed 2" NPT (M) with splash tube 16psi (RED CAP)	2" NPTM, 16PSI	34x11x8cm | 1.1kg
AUS25A-L	Vent Standard Screwed 2" NPT (M) with splash tube 7psi (GREEN CAP)	2" NPTM, 7PSI	34x11x8cm | 1.03kg
AUS25B	Vent with lockable flange to suit Cat & Komatsu fillers (2 flanges included) (RED CAP) 16psi	4"-12UNF or 4"-8BSWF, 16PSI	34x15x15cm | 1.29kg
AUS25B-L	Vent with lockable flange to suit Cat & Komatsu fillers (2 flanges included) (GREEN CAP) 7psi	4"-12UNF or 4"-8BSWF, 7PSI	34x15x15cm | 1.29kg
AUS25C	Vent Extended (100 mm) Screwed 2" NPT (M) with splash tube 16psi (RED CAP)	2" NPTM, 16PSI	44x11x8cm | 1.19kg
AUS25C-L	Vent Extended (100 mm) Screwed 2" NPT (M) with splash tube 7psi (GREEN CAP)	2" NPTM, 7PSI	44x11x8cm | 1.21kg
AUS25D	Vent Extended (100 mm), lockable flange for Cat & Komatsu (2 flanges included) (RED CAP) 16psi	FLANGE, 16PSI	44x15x15cm | 1.33kg
AUS25F	Vent Extended (277 mm) Screwed 2" NPT (M) with splash tube (RED CAP) 16psi	2" NPTM, 16PSI	56x11x8cm | 1.6kg
AUS25R	Rail Vent 2" NPT (male) thread (GREEN CAP) 7psi - Rail	2" NPTM, 7PSI	28x11x8cm | 0.88kg
AUS25A-CT	Vent Standard Screwed 2" NPT (M) with splash tube 16psi (RED CAP) - Cold Temp	2" NPTM, 16PSI	34x11x8cm | 1.1kg
AUS25A-L-CT	Vent Standard Screwed 2" NPT (M) with splash tube 7psi (GREEN CAP) - Cold Temp	2" NPTM, 7PSI	34x11x8cm | 1.03kg
AUS25C-CT	Vent Extended (100 mm) Screwed 2" NPT (M) with splash tube 16psi (RED CAP) - Cold Temp	2" NPTM, 16PSI	44x11x8cm | 1.19kg
AUS25C-L-CT	Vent Extended (100 mm) Screwed 2" NPT (M) with splash tube 7psi (GREEN CAP) - Cold Temp	2" NPTM, 7PSI	44x11x8cm | 1.21kg

Unfiltered - Low Profile

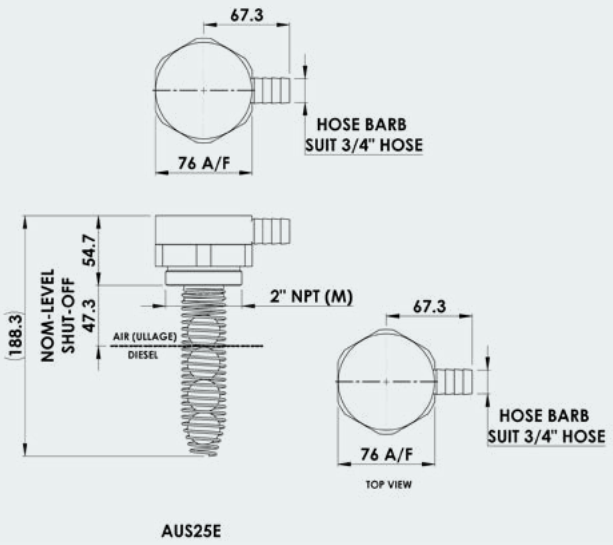

AUS25E

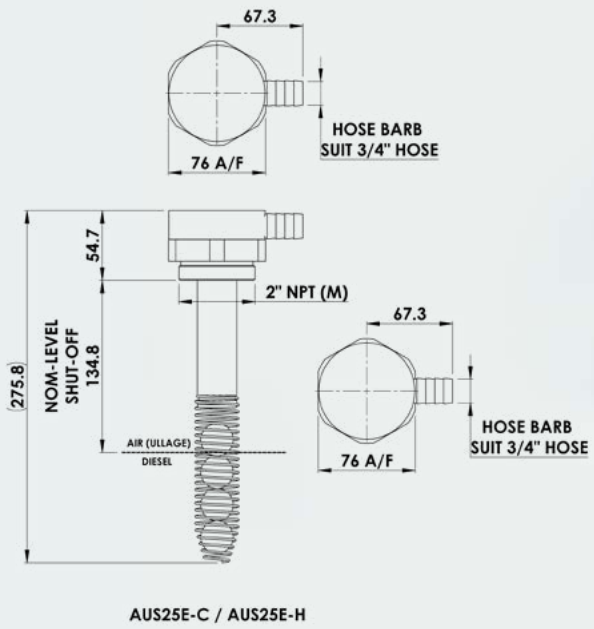

AUS25E-C / AUS25E-H

AUS25E-C

Part Number	Product Description	Tech Specs	Shipping - Dimensions & Weight
AUS25E	Vent Low Profile (short stem 36mm) with 2” NPT (Male) thread, 7psi	2” NPTM, 7PSI	20x15x8cm | 1.15kg
AUS25E-C	Vent Low Profile Extended with 2” NPT (Male) thread 7psi	2” NPTM, 7PSI	28x15x8cm | 1.35kg
AUS25E-H	Vent Low profile Extended with 2” NPT (Male) thread 16psi	2” NPTM, 16PSI	28x15x8cm | 1.35kg

Filtered 10µm

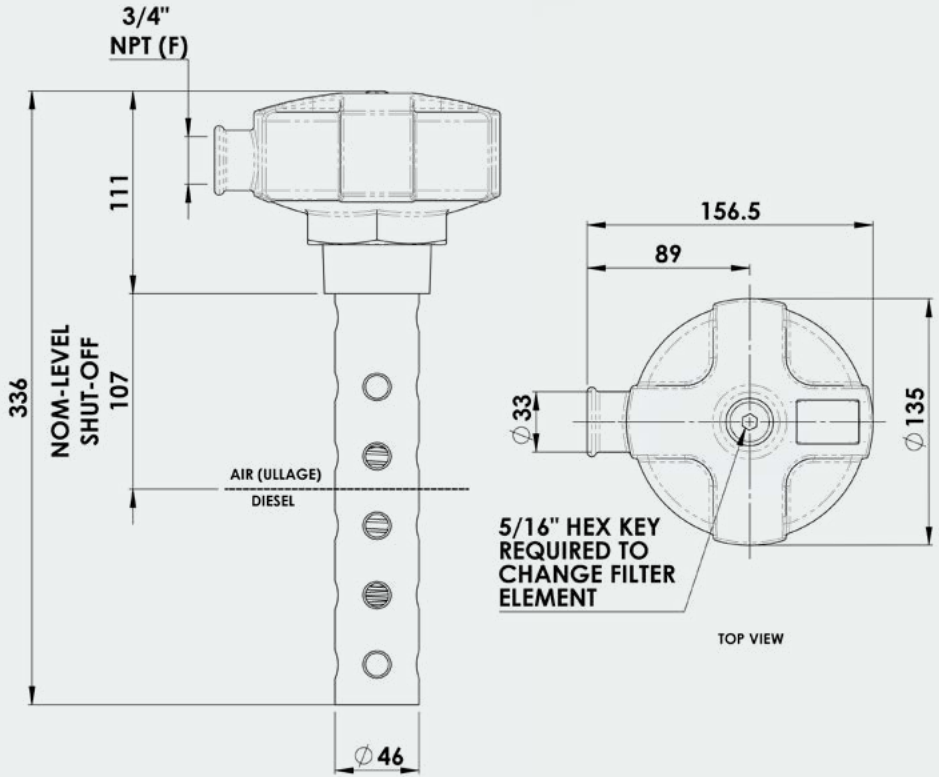

BP125A,BP125A-L

BP125A

Part Number	Product Description	Tech Specs	Shipping - Dimensions & Weight
BP125A	Filtered Vent, 10µm (nom.), 2" NPT (Male) Thread with splash tube, (16psi) (RED CAP)	2" NPTM, 16PSI	34x11x8cm | 1.6kg
BP125A-L	Filtered Vent, 10µm (nom.), 2" NPT (Male) Thread with splash-tube, (7psi), (GREEN CAP)	2" NPTM, 7PSI	34x11x8cm | 1.6kg
BP125R	Filtered Vent, 10µm (nom.), 2" NPT (Male) Thread, (7psi), (GREEN CAP) - Rail	2" NPTM, 7PSI	25x11x8cm | 1.4kg

Servicing kit on page 77

Fine Filtered 3µm

Banlaw patented# Ultra-FIne Filtered Vent (UFFV) prevents damaging airborne contaminants from entering fuel tanks and other fluid storages.

The UFFV is fitted with a large filter canister providing approximately 2000 engine hours of service. This filter removes incoming airborne contaminants greater than or equal to 3microns. Exhaust air moving through the vent during refueling bypasses the filter element. This extends filter life and does not impede outgoing airflow.

The UFFV significantly increases the life of fuel systems and engine components, and unlike standard tank breather systems, blocked filters cannot cause tank over-pressurisation.

A visual filter condition indicator is fitted to monitor filter health.

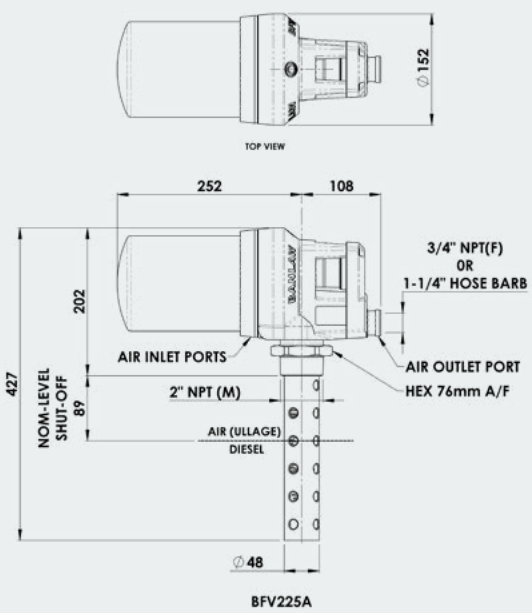

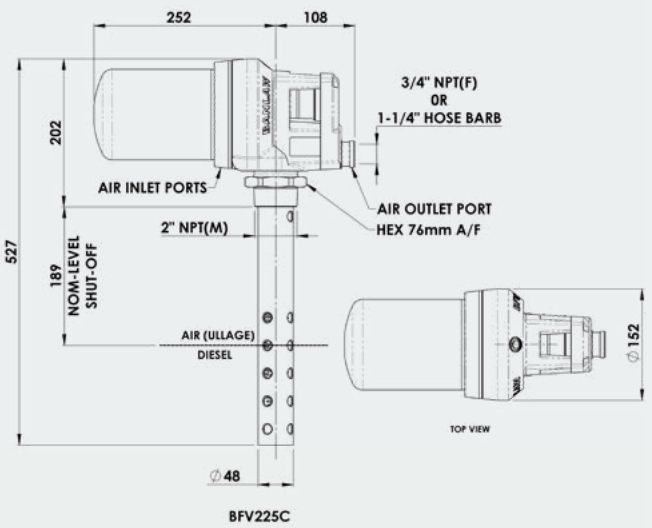

BFV225A

Note: Filtration of inwards tank air of 4micron abs. or better is recommended by major OEM's of engines used on plant equipment.
#Refer to website: 'Patents and Patents Pending' – see www.banlaw.com

Part Number	Product Description	Tech Specs	Shipping - Dimensions & Weight	
BFV225A	Ultra Fine Filtered Vent 3µm (abs.) - 16psi Pressure Relief	2" NPTM, 16PSI	46x37x20cm | 6.04kg	
BFV225A-L	Ultra Fine Filtered Vent 3µm (abs.) - 7psi Pressure Relief	2" NPTM, 7PSI	46x37x20cm | 6.04kg	
BFV225C	Ultra Fine Filtered Vent 3µm (abs.) - Extended Length - 16psi Pressure Relief	2" NPTM, 16PSI	56x37x20cm | 6.4kg	
BFV225C-L	Ultra Fine Filtered Vent 3µm (abs.) - Extended Length - 7psi Pressure Relief	2" NPTM, 7PSI	56x37x20cm | 6.4kg	
BFV225A-CT	Ultra Fine Filtered Vent 3µm (abs.) - 16psi Pressure Relief - Cold Temp	2" NPTM, 16PSI	46x37x20cm | 6.04kg	❄
BFV225A-L-CT	Ultra Fine Filtered Vent 3µm (abs.) - 7psi Pressure Relief - Cold Temp	2" NPTM, 7PSI	46x37x20cm | 6.04kg	❄
BFV225C-CT	Ultra Fine Filtered Vent 3µm (abs.) - Extended Length - 16psi Pressure Relief - Cold Temp	2" NPTM, 16PSI	56x37x20cm | 6.4kg	❄
BFV225C-L-CT	Ultra Fine Filtered Vent 3µm (abs.) - Extended Length - 7psi Pressure Relief - Cold Temp	2" NPTM, 7PSI	56x37x20cm | 6.4kg	❄

Servicing kit on page 77

Remote Breather 3µm

Our Remote Tank Breather prevents damaging airborne contaminants from entering fuel tanks and other fluid storages. It is unique in that it vents at 1,000lpm, and also filters incoming air at 1,000lpm (35.3scfm of air).

This product is perfect for service truck bulk storages, and other tanks where incoming air needs to be filtered at a high rate due to service fluids or diesel being rapidly dispensed from the tank.

- Compatible with Banlaw and other-brand unfiltered vents
- Compatible with Banlaw Venting Level Sensor (overfill protection system component)
- Supports refuelling at 1,000lpm
- Filters incoming air at up to 1,000lpm
- 3µm (abs.) filter canister

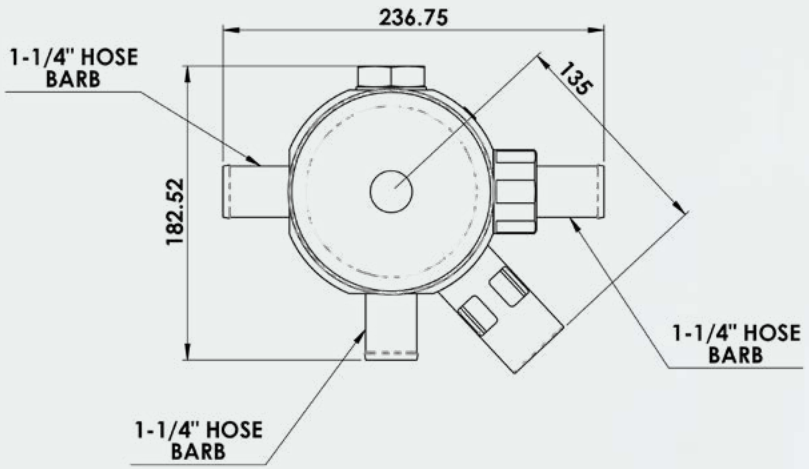

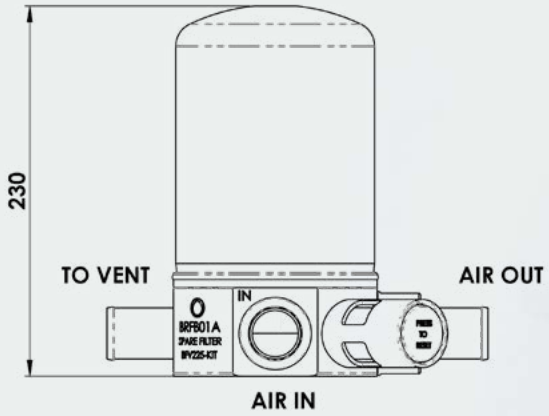

BRFB01A

Note: Filtration of inwards tank air of 4micron abs. or better is recommended by major OEM's of engines used on plant equipment.

Part Number	Product Description	Tech Specs	Shipping - Dimensions & Weight
BRFB01A	Remote Filtered Breather, 3µm (abs.) 1" BSP/1-14" Hose Barb	1" BSPPF	23x23x20cm | 3.5kg

Swivels

Banlaw's swivel range encompasses both Dry Break and Splash Fill refuelling applications.

Swivels are installed directly behind the nozzle to aid simplicity and ergonomics when refuelling your equipment. They also help prolong the life of other refuelling components.

Banlaw manufactures our nozzle swivels in either a durable steel, or a lightweight aluminium alloy.

Go to

Dry Break Swivel

Splash Fill Swivel

AUS50 & AUS10

Dry Break Swivel

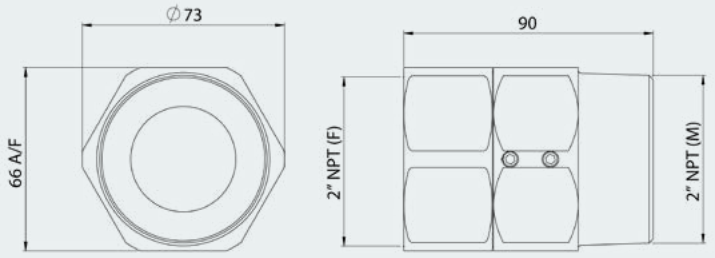

AUS10

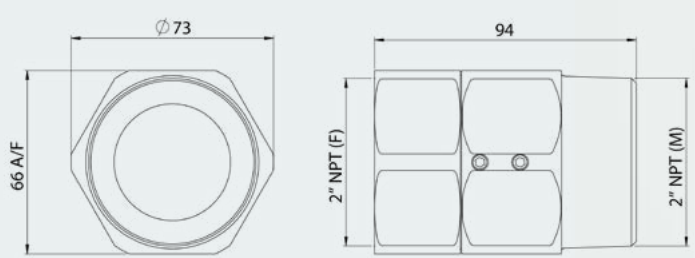

AUS50

AUS10 AUS50

Part Number	Product Description	Tech Specs	Shipping - Dimensions & Weight	
AUS7	Swivel 2" NPT (Male) x 1-1/4" NPT (Female) Steel	2" NPTM, 1-1/4" NPTF	10x6x6cm | 0.960kg	
AUS8	Swivel 1-1/2" NPT (Male) x 1-1/2" NPT (Female) Steel	1-1/2" NPTM, 1-1/2" NPTF	10x7x7cm | 1.013kg	
AUS9	Swivel 2" NPT (Male) x 1-1/2" NPT (Female) Steel	2" NPTM, 1-1/2" NPTF	10x7x7cm | 1.0335kg	
AUS10	Swivel 2" NPT (Male) x 2" NPT (Female) Steel	2" NPTMF	10x7x7cm | 1.034kg	
AUS11	Swivel 2" NPT (Male) x 1-1/2" NPT (Male) Steel	2" NPTM, 1-1/2" NPTM	11x7x7cm | 1.08kg	
AUS12	Swivel 2" NPT (Male) x 2" NPT (Male) Steel	2" NPTMM	11x7x7cm | 1.13kg	
AUS50	Swivel 2" NPT (Male) x 2" NPT (Female) Aluminium Alloy	2" NPTMF	10x7x7cm | 0.5kg	
AUS52	Swivel 2" NPT (Male) x 1-1/2" NPT (Female) Aluminium Alloy	2" NPTM, 1-1/2" NPTF	10x6x6cm | 0.54kg	
AUS53	Swivel 2" NPT (Male) x 1-7/8"JIC (Male) Aluminium Alloy	2" NPTM, 1-7/8" JICM	10x6x6cm | 0.6kg	
AUS54	Swivel 2" NPT (Male) x 1-5/8"JIC (Male) Aluminium Alloy	2" NPTM, 1-5/8" JICM	14x8x8cm | 0.64kg	
AUS55	Swivel 2" NPT (Male) x 2-1/2" JIC (Male) Aluminium Alloy	2" NPTM, 2-1/2" JICM	14x8x8cm | 0.64kg	
AUS7-CT	Swivel 2" NPT (Male) x 1-1/4" NPT (Female) Steel - Cold Temp	2" NPTM, 1-1/4" NPTF	10x6x6cm | 0.960kg	❄
AUS8-CT	Swivel 1-1/2" NPT (Male) x 1-1/2" NPT (Female) Steel - Cold Temp	1-1/2" NPTM, 1-1/2" NPTF	10x7x7cm | 1.013kg	❄
AUS9-CT	Swivel 2" NPT (Male) x 1-1/2" NPT (Female) Steel - Cold Temp	2" NPTM, 1-1/2" NPTF	10x7x7cm | 1.1kg	❄
AUS10-CT	Swivel 2" NPT (Male) x 2" NPT (Female) Steel - Cold Temp	2" NPTMF	10x7x7cm | 1.034kg	❄
AUS11-CT	Swivel 2" NPT (Male) x 1-1/2" NPT (Male) Steel - Cold Temp	2" NPTM, 1-1/2" NPTM	11x7x7cm | 1.08kg	❄
AUS12-CT	Swivel 2" NPT (Male) x 2" NPT (Male) Steel - Cold Temp	2" NPTMM	11x7x7cm | 1.13kg	❄
AUS50-CT	Swivel 2" NPT (Male) x 2" NPT (Female) Aluminium Alloy - Cold Temp	2" NPTMF	10x7x7cm | 0.5kg	❄
AUS52-CT	Swivel 2" NPT (Male) x 1-1/2" NPT (Female) Aluminium Alloy - Cold Temp	2" NPTM, 1-1/2" NPTF	10x6x6cm | 0.54kg	❄
AUS53-CT	Swivel 2" NPT (Male) x 1-7/8"JIC (Male) Aluminium Alloy - Cold Temp	2" NPTM, 1-7/8" JICM	10x6x6cm | 0.6kg	❄
AUS54-CT	Swivel 2" NPT (Male) x 1-5/8"JIC (Male) Aluminium Alloy - Cold Temp	2" NPTM, 1-5/8" JICM	14x8x8cm | 0.64kg	❄
AUS55-CT	Swivel 2" NPT (Male) x 2-1/2" JIC (Male) Aluminium Alloy - Cold Temp	2" NPTM, 2-1/2" JICM	14x8x8cm | 0.64kg	❄

Break Away Valves

Banlaw's Break Away Valves are designed to fracture when a specific amount of lateral stress is applied.

This means that should a vehicle drive-away during refuelling, the valve assembly will separate into two Dry Break components. These Dry Break components will prevent fuel from spilling from either the delivery line, or the hose which is still connected to the vehicle.

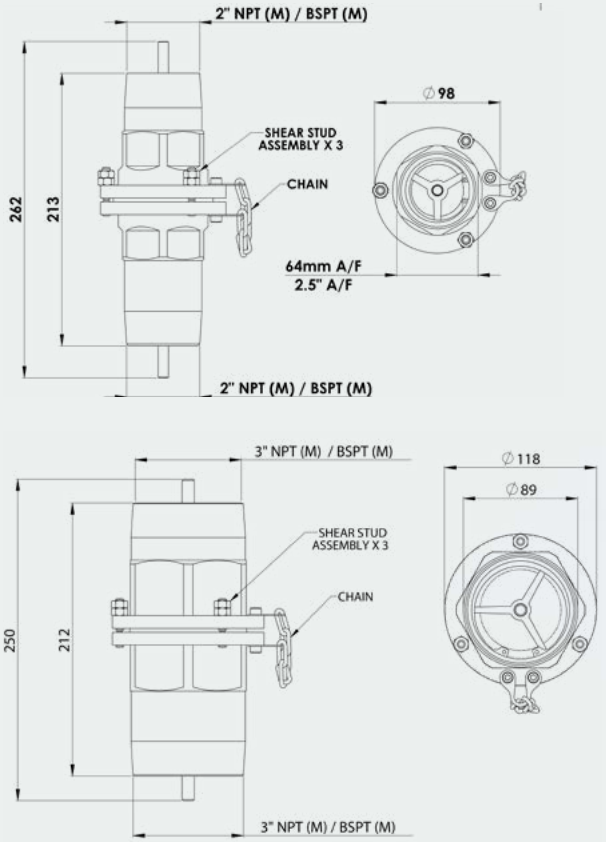

AUS4W-50

Part Number	Product Description	Tech Specs	Shipping - Dimensions & Weight	
AUS4W-50	Break Away Valve - 2" BSPT (Male)	2" BSPM	29x11x11cm | 3.23kg	
AUS4W-50N	Break Away Valve - 2" NPT (Male)	2" NPTM	29x11x11cm | 3.23kg	
AUS4W-75	Break Away Valve - 3" BSPT (Male)	3"BSPTM	25x13x13cm | 5.5kg	
AUS4W-75N	Break Away Valve - 3" NPT (Male)	3" NPTM	25x13x13cm | 5.5kg	
AUS4W-50-CT	Break Away Valve - 2" BSPT (Male)- Cold Temp	2" BSPM	29x11x11cm | 3.23kg	❄
AUS4W-50N-CT	Break Away Valve - 2" NPT (Male) - Cold Temp	2" NPTM	29x11x11cm | 3.23kg	❄
AUS4W-75-CT	Break Away Valve - 3" BSPT (Male) - Cold Temp	3" BSPTM	25x13x13cm | 5.5kg	❄
AUS4W-75N-CT	Break Away Valve - 3" NPT (Male) - Cold Temp	3" NPTM	25x13x13cm | 5.5kg	❄

Replacement parts & kits on page 77

Fluid Transfer

Banlaw LubeCentral™ products are a selection of fluid transfer couplings designed for industrial environments.

They feature exceptional durability, flow rate capability, and are known for their ability to avoid liquid contamination and spillage.

Go to

Classic

Flush Face

Classic

Banlaw's Classic range of couplings has been proven in some of the world's harshest environments for decades.

Today the classic range is still relevant, and used by many organisations that require high flow rates, durability, and also premium manufacture quality.

A unique coupling is provided for each oil, grease or coolant type, eliminating the possibility of cross-contamination.

Go to

- Coolant
- Crankcase
- Hydraulic
- Transmission
- Push-to-Connect
- R Series
- Grease

Coolant

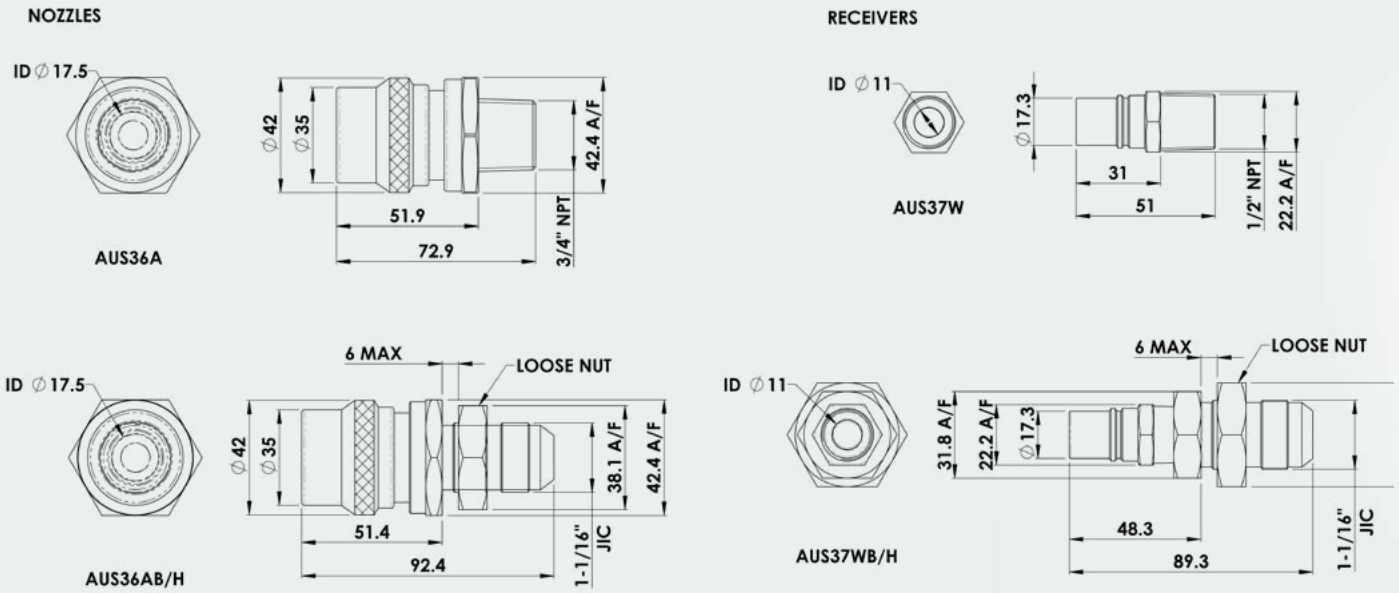

AUS36A

AUS37W

Part Number	Product Description	Tech Specs	Shipping - Dimensions & Weight	Items Included	
AUS37W	Receiver Coolant 1/2" NPT (Male) - Couples with AUS36A Series	1/2" NPTM	5x2x2cm | 0.06kg	Cap sold separately	
AUS37WB/H	Receiver Coolant 1-1/16" JIC (Male) Bulkhead fitting - Couples with AUS36A Series	1-1/16"JICM	6x2x2cm | 0.08kg	Cap sold separately	
AUS37W-C	Receiver Coolant Cap to suit AUS37W Series	CAP	10x7x3cm | 0.03kg		
AUS36A	Nozzle Coolant 3/4" NPT (Male) - Couples with AUS37W Series	3/4" NPTM	8x6x6cm | 0.368kg	Plug sold separately	
AUS36A-B	Nozzle Coolant 1/2" NPT (Male) - Couples with AUS37W Series	1/2" NPTM	8x6x6cm | 0.368kg	Plug sold separately	
AUS36AB/H	Nozzle Coolant 1-1/16" JIC (Male) Bulkhead - Couples with AUS37W Series	1-1/16"JICM	9x6x6cm | 0.4kg	Plug sold separately	
AUS36A-P	Nozzle Coolant Plug to suit AUS36A Series	PLUG	13x6x3cm | 0.026kg		
AUS37WB/H-CT	Receiver Coolant 1-1/16" JIC (Male) Bulkhead fitting - Couples with AUS36A Series - Cold Temp	1-1/16" JICM	6x2x2cm | 0.08kg	Cap sold separately	❄
AUS37W-CT	Receiver Coolant 1/2" NPT (Male) - Couples with AUS36A Series- Cold Temp	1/2" NPTM	5x2x2cm | 0.06kg	Cap sold separately	❄
AUS36AB/H-CT	Nozzle Coolant 1-1/16" JIC (Male) Bulkhead - Couples with AUS37W Series - Cold Temp	1-1/16" JICM	9x6x6cm | 0.4kg	Plug sold separately	❄
AUS36A-B-CT	Nozzle Coolant 1/2" NPT (Male) - Couples with AUS37W Series - Cold Temp	1/2" NPTM	8x6x6cm | 0.368kg	Plug sold separately	❄
AUS36A-CT	Nozzle Coolant 3/4" NPT (Male) - Couples with AUS37W Series - Cold Temp	3/4" NPTM	8x6x6cm | 0.368kg	Plug sold separately	❄

Crankcase

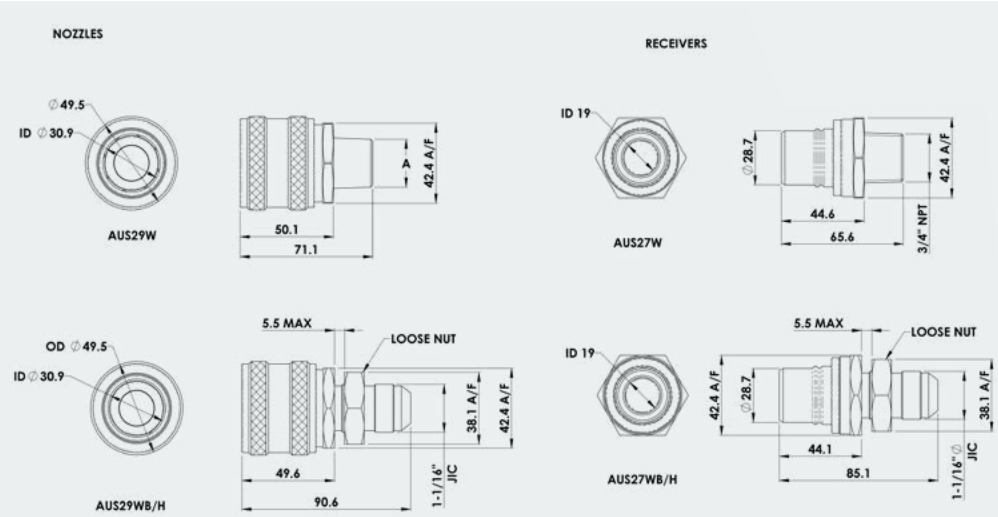

Part Number	Product Description	Tech Specs - A	Shipping - Dimensions & Weight	Items Included
AUS27W	Receiver Crankcase 3/4" NPT (Male) - Couples with AUS29L & AUS29W Series	3/4" NPTM	8x5x5cm | 0.231kg	Cap sold separately
AUS27W-B	Receiver Crankcase 1/2" NPT (Male) - Couples with AUS29L & AUS29W Series	1/2" NPTM	7x5x5cms | 0.21kg	Cap sold separately
AUS27WB/H	Receiver Crankcase 1-1/16" JIC (Male) Bulkhead fitting - Couples with AUS29L & AUS29W Series	1-1/16"JICM	9x5x5cm | 0.32kg	Cap sold separately
AUS27W-C	Receiver Crankcase Cap to suit AUS27W Series	CAP	13x7x7cm | 0.046kg	
AUS29L	Nozzle Crankcase with Lanyard 3/4" NPT (Male) - Couples with AUS27W Series	3/4" NPTM	8x6x6cm | 0.48kg	Plug sold separately
AUS29LB/H	Nozzle Crankcase with Lanyard Bulkhead 1-1/16" JIC (Male) - Couples with AUS27W Series	1-1/16"JICM	9x6x6cm | 0.5kg	Plug sold separately
AUS29W	Nozzle Crankcase 3/4" NPT (Male) - Couples with AUS27W Series	3/4" NPTM	8x5x5cm | 0.493kg	Plug sold separately
AUS29W-B	Nozzle Crankcase 1/2" NPT (Male) - Couples with AUS27W Series	1/2" NPTM	7x6x6cm | 0.46kg	Plug sold separately
AUS29WB/H	Nozzle Crankcase Bulkhead 1-1/16" JIC (Male)- Couples with AUS27W Series	1-1/16"JICM	9x5x5cm | 0.5kg	Plug sold separately
AUS29W-P	Nozzle Crankcase Plug to suit AUS29 Series	PLUG	9x5x5cm | 0.03kg	
AUS27WB/H-CT	Receiver Crankcase 1/1/16" JIC (Male) Bulkhead fitting - Couples with AUS29L & AUS29W Series -	1-1/16" JICM	9x5x5cm | 0.32kg	Cap sold separately ❄
AUS27W-B-CT	Receiver Crankcase 1/2" NPT (Male) - Couples with AUS29L & AUS29W Series - Cold Temp	1/2" NPTM	7x5x5cms | 0.21kg	Cap sold separately ❄
AUS27W-CT	Receiver Crankcase 3/4" NPT (Male)- Couples with AUS29L & AUS29W Series - Cold Temp	3/4" NPTM	7x5x5cm | 0.25kg	Cap sold separately ❄
AUS29LB/H-CT	Nozzle Crankcase with Lanyard Bulkhead 1-1/16" JIC (Male) - Couples with AUS27W Series - Cold	1-1/16" JICM	9x6x6cm | 0.5kg	Plug sold separately ❄
AUS29L-CT	Nozzle Crankcase with Lanyard 3/4" NPT (Male) - Couples with AUS27W Series - Cold Temp	3/4" NPTM	8x6x6cm | 0.48kg	Plug sold separately ❄
AUS29WB/H-CT	Nozzle Crankcase Bulkhead 1-1/16" JIC (Male) - Couples with AUS27W Series - Cold Temp	1-1/16" JICM	9x5x5cm | 0.5kg	Plug sold separately ❄
AUS29W-B-CT	Nozzle Crankcase 1/2" NPT (Male) - Couples with AUS27W Series - Cold Temp	1/2" NPTM	7x6x6cm | 0.46kg	Plug sold separately ❄
AUS29W-CT	Nozzle Crankcase 3/4" NPT (Male) - Couples with AUS27W Series - Cold Temp	3/4" NPTM	8x5x5cm | 0.493kg	Plug sold separately ❄

Hydraulic

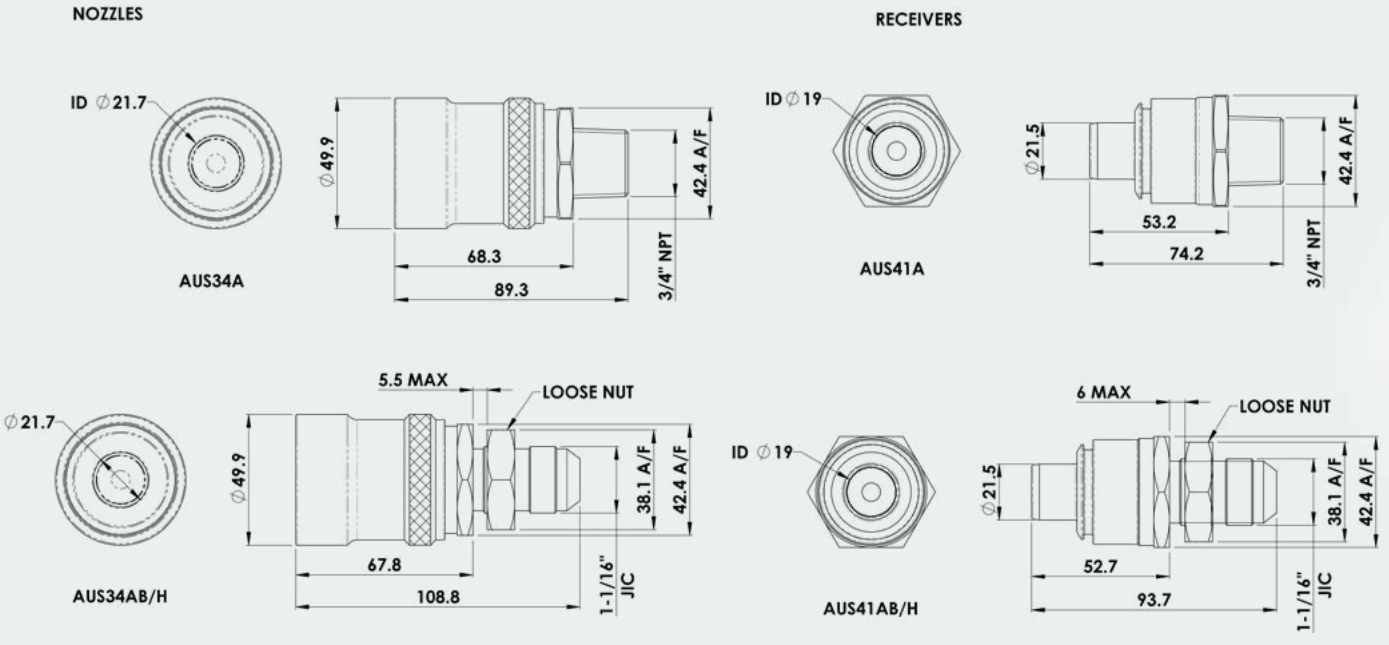

AUS34A

AUS41A

Part Number	Product Description	Tech Specs	Shipping - Dimensions & Weight	Items Included
AUS41A	Receiver Hydraulic 3/4" NPT (Male) Couples with AUS34A Series	3/4" NPTM	8x5x5cm | 0.313kg	Cap sold separately
AUS41AB/H	Receiver Hydraulic Bulkhead 1/1/16" JIC (Male), Couples with AUS34A Series	1-1/16"JICM	9x5x5cm | 0.402kg	Cap sold separately
AUS41A-C	Receiver Hydraulic Cap to suit AUS41A Series	CAP	10x5x4cm | 0.038kg	
AUS34A	Nozzle Hydraulic 3/4" NPT (Male) - Couples with AUS41A Series	3/4" NPTM	10x6x6cm | 0.67kg	Plug sold separately
AUS34AB/H	Nozzle Hydraulic Bulkhead 1-1/16" JIC (Male) - Couples with AUS41A Series	1-1/16"JICM	11x6x6cm | 0.66kg	Plug sold separately
AUS34A-P	Nozzle Plug to suit AUS34A Series	PLUG	7x10x3cm | 0.035kg	
AUS41AB/H-CT	Receiver Hydraulic Bulkhead 1/1/16" JIC (Male), Couples with AUS34A Series - Cold Temp	1-1/16" JICM	9x5x5cm | 0.402kg	Cap sold separately ❄
AUS41A-CT	Receiver Hydraulic 3/4" NPT (Male) Couples with AUS34A Series - Cold Temp	3/4" NPTM	8x5x5cm | 0.3125kg	Cap sold separately ❄
AUS34AB/H-CT	Nozzle Hydraulic Bulkhead 1-1/16" JIC (Male) - Couples with AUS41A Series - Cold Temp	1-1/16" JICM	11x6x6cm | 0.66kg	Plug sold separately ❄
AUS34A-CT	Nozzle Hydraulic 3/4" NPT (Male) - Couples with AUS41A Series - Cold Temp	3/4" NPTM	10x6x6cm | 0.67kg	Plug sold separately ❄

Transmission

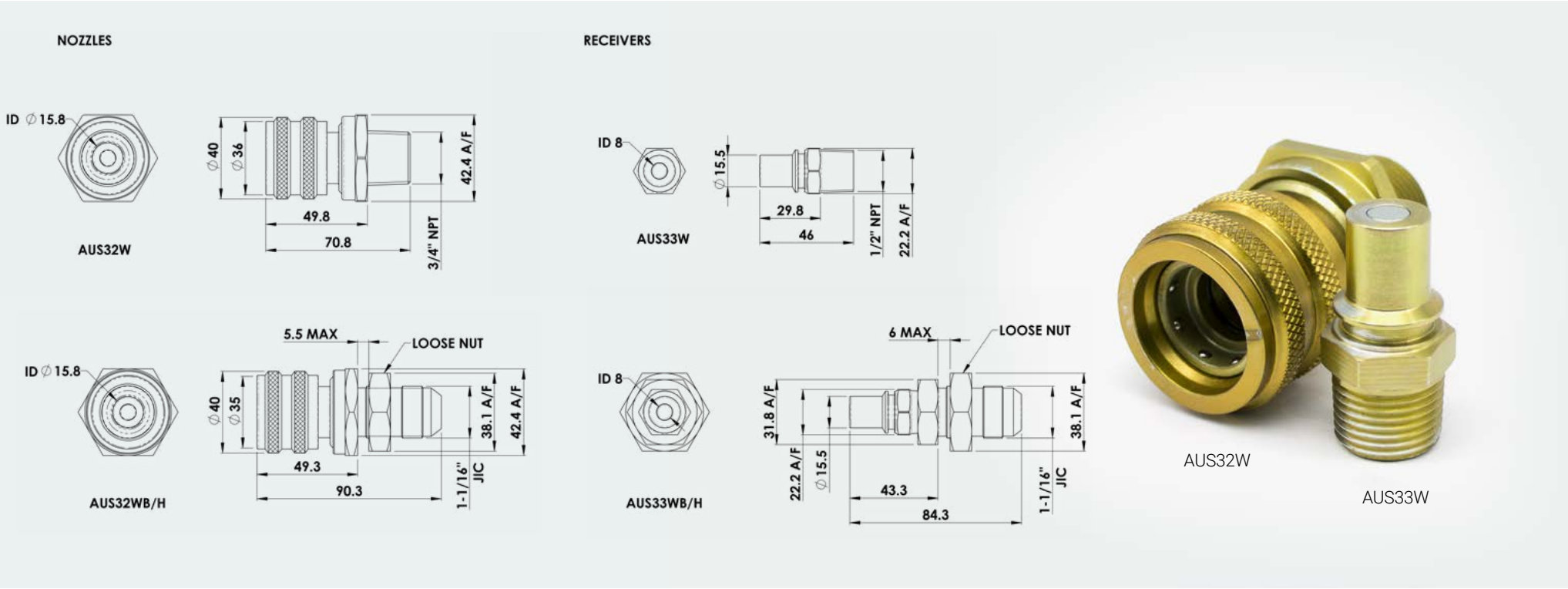

Part Number	Product Description	Tech Specs	Shipping - Dimensions & Weight	Items Included
AUS33W	Receiver Transmission 1/2" NPT (Male) - Couples with AUS32W Series	1/2" NPTM	10x7x3cm | 0.060kg	Cap sold separately
AUS33WB/H	Receiver Transmission Bulkhead 1-1/16" JIC (Male) - Couples with AUS32W Series	1-1/16"JICM	11x7x3cm | 0.231kg	Cap sold separately
AUS33W-C	Receiver Transmission Cap to suit AUS33W Series	CAP	10x7x3cm | 0.033kg	
AUS32W	Nozzle Transmission 3/4" NPT (Male) - Couples with AUS33W Series	3/4" NPTM	7x5x5cm | 0.365kg	Plug sold separately
AUS32W-B	Nozzle Transmission 1/2" NPT (Male) - Couples with AUS33W Series	1/2" NPTM	7x5x5cm | 0.365kg	Plug sold separately
AUS32WB/H	Nozzle Transmission Bulkhead 1-1/16" JIC (Male) - Couples with AUS33W Series	1-1/16"JICM	8x5x5cm | 0.4kg	Plug sold separately
AUS32W-P	Nozzle Transmission Plug to suit AUS32W Series	PLUG	10x6x1cm | 0.02kg	
AUS33WB/H-CT	Receiver Transmission Bulkhead 1-1/16" JIC (Male) - Couples with AUS32W Series - Cold Temp	1-1/16" JICM	11x7x3cm | 0.231kg	Cap sold separately ❄
AUS33W-CT	Receiver Transmission 1/2" NPT (Male) - Couples with AUS32W Series - Cold Temp	1/2" NPTM	10x7x3cm | 0.060kg	Cap sold separately ❄
AUS32WB/H-CT	Nozzle Transmission Bulkhead 1-1/16" JIC (Male) - Couples with AUS33W Series - Cold Temp	1-1/16" JICM	8x5x5cm | 0.4kg	Plug sold separately ❄
AUS32W-B-CT	Nozzle Transmission 1/2" NPT (Male) - Couples with AUS33W Series - Cold Temp	1/2" NPTM	7x5x5cm | 0.365kg	Plug sold separately ❄
AUS32W-CT	Nozzle Transmission 3/4" NPT (Male) - Couples with AUS33W Series - Cold Temp	3/4" NPTM	7x5x5cm | 0.365kg	Plug sold separately ❄

Push-to-Connect

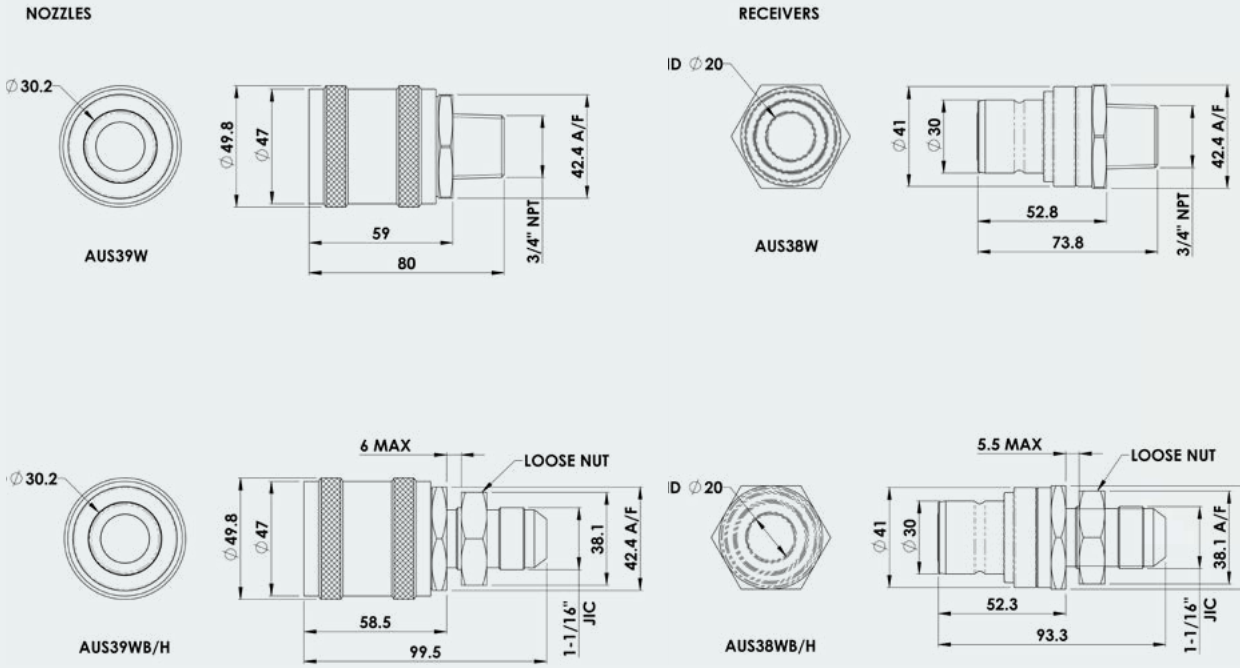

AUS39W

AUS38W

Part Number	Product Description	Tech Specs	Shipping - Dimensions & Weight	Items Included
AUS38WB/H	Receiver Push-to-Connect Bulkhead 1-1/16" JIC (Male), Couples with AUS39W Series	1-1/16"JICM	9x5x5cm | 0.31kg	Cap sold separately
AUS38W	Receiver Push-to-Connect 3/4" NPT (Male), Couples with AUS39W Series	3/4" NPTM	8x5x5cm | 0.292kg	Cap sold separately
AUS38W-C	Receiver Push-to-Connect Cap to suit AUS38W Series	CAP	10x7x4cm | 0.04kg	
AUS39W	Nozzle Push-to-Connect 3/4" NPT (Male), Couples with AUS38 Series	3/4" NPTM	9x5x5cm | 0.58kg	
AUS39WB/H	Nozzle Push-to-Connect Bulkhead 1-1/16" JIC (Male), Couples with AUS38 Series	1-1/16"JICM	10x5x5cm | 0.6kg	
AUS38WB/H-CT	Receiver Push-to-Connect Bulkhead 1-1/16" JIC (Male), Couples with AUS39W Series - Cold Temp	1-1/16" JICM	9x5x5cm | 0.31kg	Cap sold separately ❄
AUS38W-CT	Receiver Push-to-Connect 3/4" NPT (Male), Couples with AUS39W Series - Cold Temp	3/4" NPTM	8x5x5cm | 0.292kg	Cap sold separately ❄
AUS39WB/H-CT	Nozzle Push-to-Connect Bulkhead 1-1/16" JIC (Male), Couples with AUS38 Series - Cold Temp	1-1/16" JICM	10x5x5cm | 0.6kg	❄
AUS39W-CT	Nozzle Push-to-Connect 3/4" NPT (Male), Couples with AUS38 Series - Cold Temp	3/4" NPTM	9x5x5cm | 0.58kg	❄

R Series

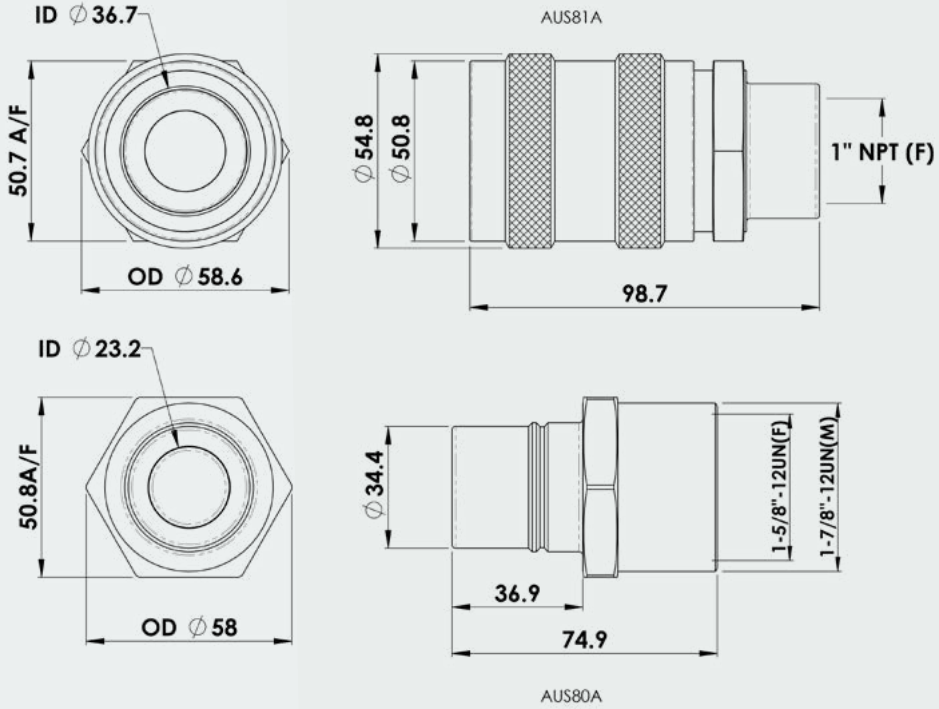

AUS81A AUS80A

Part Number	Product Description	Tech Specs	Shipping - Dimensions & Weight	Items Included
AUS80A	Receiver, Wiggins R18 equivalent receiver to suit AUS81A Nozzle	1.875-12UN-2A, 1.625-12UN-2B	10x6x6cm | 0.36kg	Cap sold separately
AUS80A-C	Receiver Cap to suit AUS80A	CAP	10x5x5cm | 0.057kg	
AUS81A	Nozzle, Wiggins R17 equivalent Nozzle to suit AUS80A Receiver	1" NPTF	10x5x5cm | 0.8kg	Plug sold separately
AUS81A-P	Nozzle Plug to suit AUS81A	PLUG	8x6x3cm | 0.049kg	

Grease

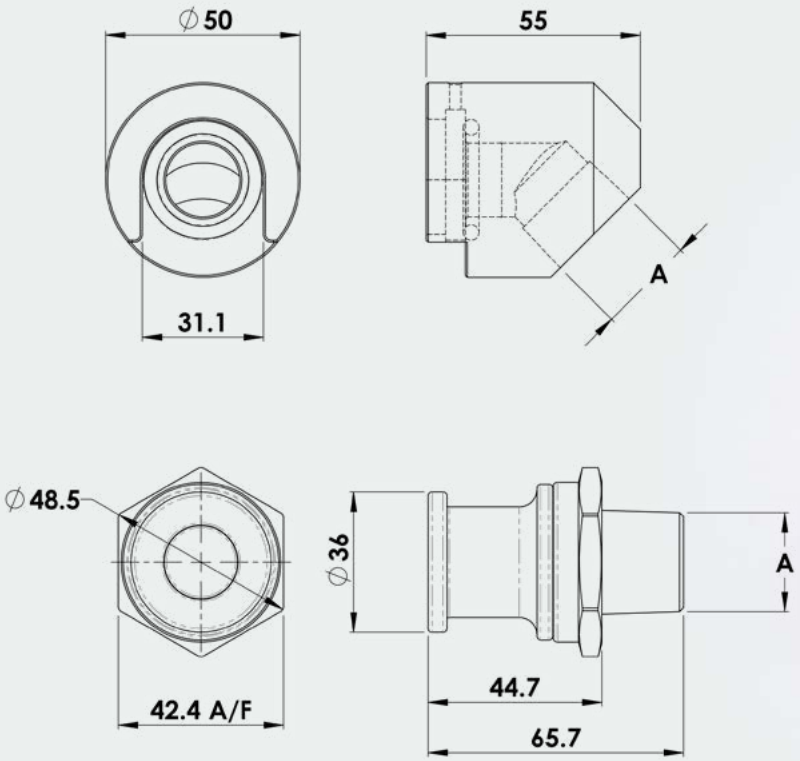

AUSGN

AUSGR

Part Number	Product Description	Tech Specs - A	Shipping - Dimensions & Weight	Items Included
AUSGRN	Receiver Grease 3/8" NPT (Male)	3/8" NPTM	6x5x5cm | 0.21kg	Cap sold separately
AUSGRB	Receiver Grease 1/2" NPT (Male)	1/2" NPTM	7x5x5cm | 0.22kg	Cap sold separately
AUSGR	Receiver Grease 3/4" NPT (Male)	3/4" NPTM	8x6x6cm | 0.244kg	Cap sold separately
AUSGRB/H	Receiver Grease Bulkhead 1-1/16" JIC (Male) - Couples with AUSGN	1-1/16" JICM	8x5x5cm | 0.4kg	Cap sold separately
AUSGRC	Receiver Cap to suit AUSGR Series	CAP	10x7x5cm | 0.046kg	
AUSGN	Nozzle Grease 3/4" NPT (Female)	3/4" NPTF	6x5x5cm | 0.49kg	Plug sold separately
AUSGNP	Nozzle Plug to suit AUSGN	PLUG	10x6x3cm | 0.041kg	

Flush Face

Our Flush Face range of couplings is designed to fill and evacuate a wide range of fluids with maximum efficiency.

They contain a superior 'ball-lock' latching system for a stronger lock connection, Dry Break design for reduced spills, and are Flush Faced to minimise the particulate contaminants which make it into the fluid path.

Each set of couplings are colour coded to assist the operator in identifying matched fittings, and only same-coloured nozzles and receivers can connect, eliminating fluid cross-contamination.

Sound engineering design focused on the internal fluid path means the Banlaw Flush Face Range of couplings has a higher flow capability, and allows for more efficient service intervals.

Go to

Evacuation

Bulk Fluid Transfer

Grease Transfer

Size 0 | Size 1 | Size 2

Size 3 | Size 4 | Size 5

Size 6 | Size 7 | Size 8

Size 9 | Size 10 | Size 11

Evacuation

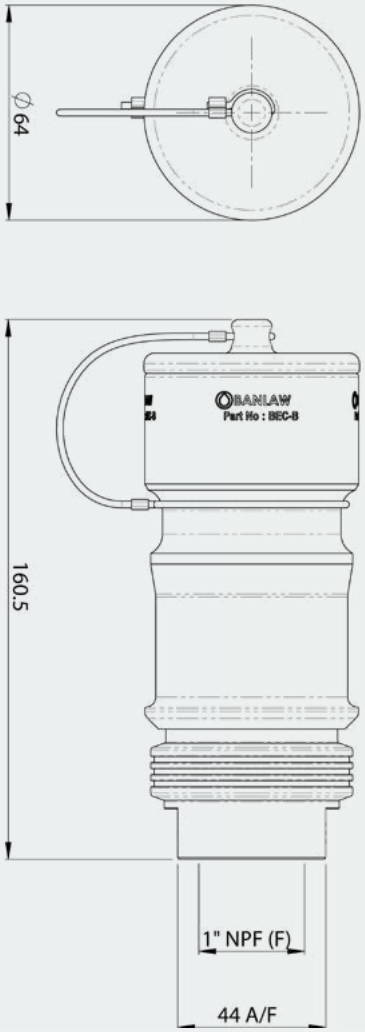

BEC-B

Part Number	Product Description	Tech Specs	Shipping - Dimensions & Weight	Items Included
BEC-B	Flush Face BPL Evacuation Coupling 1" NPT- Suits All BPLR**E Receivers	1" NPTF	15x7x7cm | 1.67kg	Includes Plug
BEC-B-CT	Flush Face BPL Evacuation Coupling 1" NPT - Suits All BPLR**E Receivers - Cold Temp	1" NPTF	15x7x7cm | 1.67kg	Includes Plug ❄

Bulk Fluid Transfer

Our Bulk Fluid Transfer Coupling is designed for the bi-directional transfer of diesel at up to 500lpm. May also be used for the bulk transfer of other compatible fluid types.

Originally designed for in-line refuelling during long haul rail trips, the coupling will not leak under load and vibration.

It includes a positive twist-lock mechanism, so that when it's correctly connected, it stays connected.

The Banlaw Bulk Transfer Coupling may connect under residual nozzle side line pressure, or disconnect under residual line pressure.

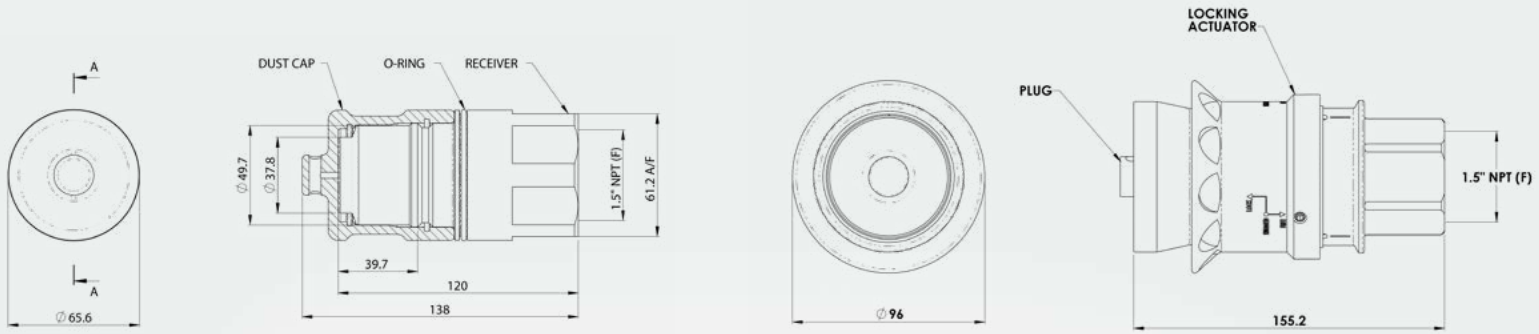

BNC40

BRC40

Part Number	Product Description	Tech Specs - A	Shipping - Dimensions & Weight	Items Included	
BRC40	Bulk Transfer Inline Transfer Coupling Receiver Inc. cap	1-1/2" NPTM	14x7x7cm | 1.35kg	Includes Cap	
BNC40	Bulk Transfer Inline Transfer Coupling Nozzle	1-1/2" NPTF	17x10x10cm | 2.3kg	Includes Plug	
BRC40-CT	Bulk Transfer Inline Transfer Coupling Receiver Inc. cap - Cold Temp	1-1/2" NPTM	14x7x7cm | 1.35kg	Includes Cap	❄
BNC40-CT	Bulk Transfer Inline Transfer Coupling Nozzle - Cold Temp	1-1/2" NPTF	17x10x10cm | 2.3kg	Includes Plug	❄

Caps on pages 81

Grease Transfer

The patented# Banlaw Grease Transfer Coupling is safe, fast, and easy-to-use.

Flush-faced design and a positive-connect feel mitigate the risk of common grease-related injuries.

The GTX also offers superior grease transfer rates when compared with competitor products.

Unlike typical grease couplings, the GTX won't discharge grease onto the ground. Flow will only occur when the nozzle and receiver are connected.

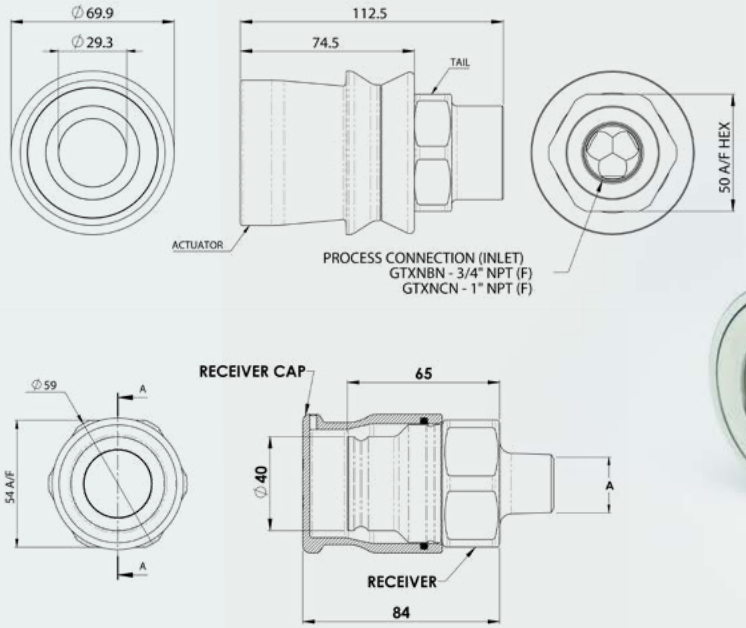

GTXNBN

GTXRB

Note: The Banlaw Flush Face Grease Couplings may connect under residual nozzle side line pressure, or disconnect under residual line pressure.

#Refer to website: 'Patents and Patents Pending' – see www.banlaw.com

Part Number	Product Description	Tech Specs - A	Shipping - Dimensions & Weight	Items Included	
GTXRA	Flush Face Grease Transfer Receiver, 1/2" NPT	1/2" NPTM	6x6x10cm | 0.58kg	Includes Cap	
GTXRB	Flush Face Grease Transfer Receiver, 3/4" NPT	3/4" NPTM	6x6x10cm | 0.58kg	Includes Cap	
GTXRBO	Flush Face Grease Transfer Receiver, 3/4" UNO	3/4" UNOM	6x6x10cm | 0.58kg	Includes Cap	
GTXRC	Flush Face Grease Transfer Receiver, 1" NPT	1" NPTM	6x6x10cm | 0.58kg	Includes Cap	
GTXNBN	Flush Face Grease Transfer Nozzle, 3/4" NPT	3/4" NPTF	7x7x13cm | 1.1kg		
GTXNCN	Flush Face Grease Transfer Nozzle, 1" NPT	1" NPTF	7x7x13cm | 1.1kg		
GTXRA-CT	Flush Face Grease Transfer Receiver, 1/2" NPT - Cold Temp	1/2" NPTM	6x6x10cm | 0.58kg	Includes Cap	❄
GTXRB-CT	Flush Face Grease Transfer Receiver, 3/4" NPT - Cold Temp	3/4" NPTM	6x6x10cm | 0.58kg	Includes Cap	❄
GTXRBO-CT	Flush Face Grease Transfer Receiver, 3/4" UNO - Cold Temp	3/4" UNOM	6x6x10cm | 0.58kg	Includes Cap	❄
GTXRC-CT	Flush Face Grease Transfer Receiver, 1" NPT - Cold Temp	1" NPTM	10x6x6cm | 0.58kg	Includes Cap	❄
GTXNBN-CT	Flush Face Grease Transfer Nozzle, 3/4" NPT - Cold Temp	3/4" NPTF	7x7x13cm | 1.1kg		❄
GTXNCN-CT	Flush Face Grease Transfer Nozzle, 1" NPT - Cold Temp	1" NPTF	7x7x13cm | 1.1kg		❄

Caps on pages 81 & 82

Size 0 - Silver

The smallest in our flush face range, the Size 0 is perfect for general fluid transfer; but also dosing, withdrawing product samples for analysis, and as a pressure tap for pipeline analysis.

100% stainless steel construction ensures the receiver is not prone to corrosion, and will operate as designed even after significant periods without use.

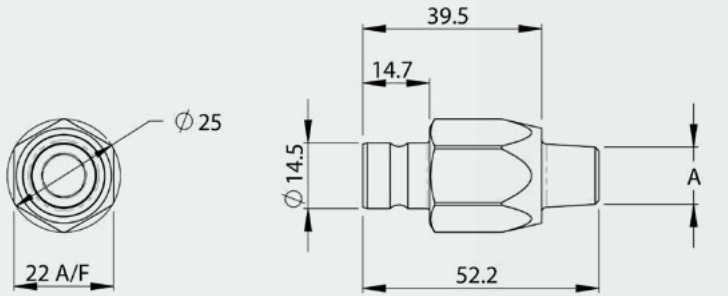

BPLN0

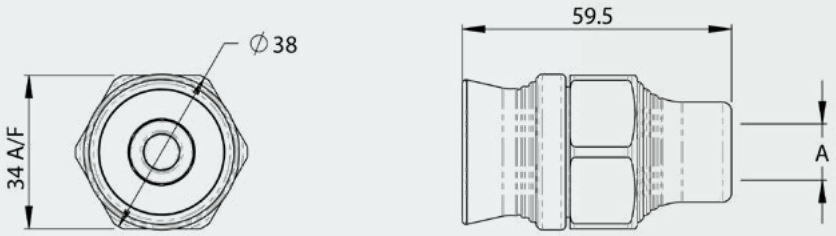

BPLR0

Part Number	Product Description	Tech Specs - A	Shipping - Dimensions & Weight	Items Included
BPLR0	Flush Face BPL Receiver, 1/4" BSPT, SILVER, Size 0	1/4" BSPTM	2x2x6cm | 0.084kg	Cap sold separately
BPLN0	Flush Face BPL Nozzle, 1/4" BSP, SILVER - Size 0	1/4" BSPF	6x4x4cm | 0.246kg	Cap sold separately

Caps on pages 81

Size 1 - Brass

Commonly used with coolant, the Size 1 coupling is sold with standard or 'non-evac' receivers. Many organisations do not wish for used coolant to be mixed with other waste service fluids. The 'non-evac' receiver versions will not connect to the Banlaw Evacuation Coupling.

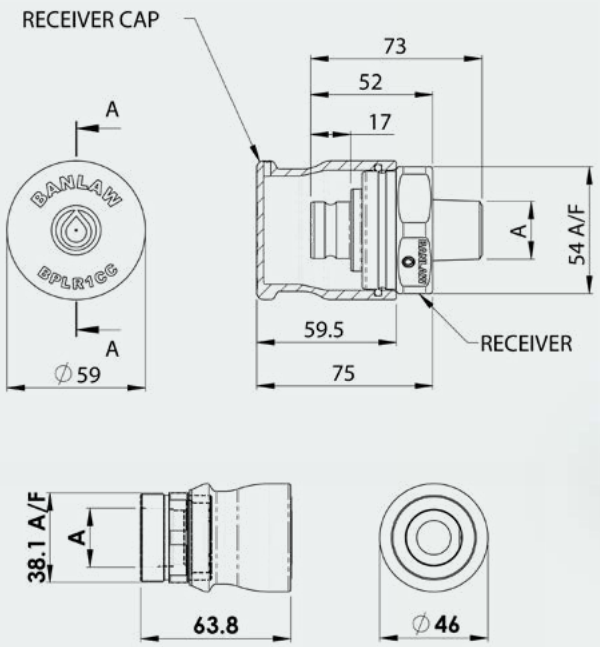

BPLN1BN BPLR1AE

Part Number	Product Description	Tech Specs - A	Shipping - Dimensions & Weight	Items Included
BPLR1AE	Flush Face BPL Receiver, 1/2" NPT, BRASS, Size 1	1/2" NPTM	11x6x6cm | 0.7kg	Includes Cap
BPLR1AN	Flush Face BPL Receiver, 1/2" NPT, BRASS, Size 1 - Non-Evac	1/2" NPTM	7x5x5cm | 0.235kg	Cap sold separately
BPLR1BE	Flush Face BPL Receiver, 3/4" NPT, BRASS, Size 1	3/4" NPTM	11x6x6cm | 0.72kg	Includes Cap
BPLR1BN	Flush Face BPL Receiver, 3/4" NPT, BRASS, Size 1 - Non-Evac	3/4" NPTM	7x5x5cm | 0.256kg	Cap sold separately
BPLN1BN	Flush Face BPL Nozzle, 3/4" NPT, BRASS, Size 1	3/4" NPTF	6x5x5cm | 0.498kg	Cap sold separately
BPLN1CN	Flush Face BPL Nozzle, 1" NPT, BRASS, Size 1	1" NPTF	9x5x5cm | 0.45kg	Cap sold separately
BPLR1AE-CT	Flush Face BPL Receiver, 1/2" NPT, BRASS, Size 1- Cold Temp	1/2" NPTM	11x6x6cm | 0.7kg	Includes Cap ❄
BPLR1BE-CT	Flush Face BPL Receiver, 3/4" NPT, BRASS, Size 1 - Cold Temp	3/4" NPTM	11x6x6cm | 0.72kg	Includes Cap ❄
BPLN1BN-CT	Flush Face BPL Nozzle, 3/4" NPT, BRASS, Size 1 - Cold Temp	3/4" NPTF	9x5x5cm | 0.84kg	Cap sold separately ❄
BPLN1CN-CT	Flush Face BPL Nozzle, 1" NPT, BRASS, Size 1 - Cold Temp	1" NPTF	9x5x5cm | 0.45kg	Cap sold separately ❄

Caps on pages 81 & 82

Size 2 - Gold

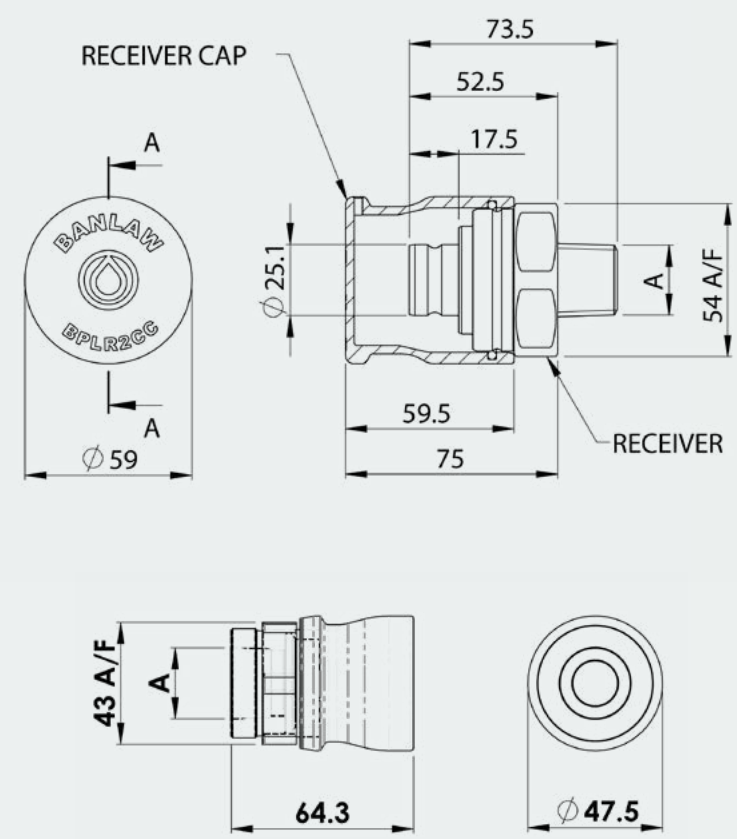

BPLN2BN

BPLR2BE

Part Number	Product Description	Tech Specs - A	Shipping - Dimensions & Weight	Items Included
BPLR2BE	Flush Face BPL Receiver, 3/4" NPT, GOLD, Size 2	3/4" NPTM	11x6x6cm | 0.44kg	Includes Cap
BPLR2CE	Flush Face BPL Receiver, 1" NPT, GOLD, Size 2	1" NPTM	11x6x6cm | 0.44kg	Includes Cap
BPLN2BN	Flush Face BPL Nozzle, 3/4" NPT, GOLD, Size 2	3/4" NPTF	9x5x5cm | 0.41kg	Cap sold separately
BPLN2CN	Flush Face BPL Nozzle, 1" NPT, GOLD, Size 2	1" NPTF	9x5x5cm | 0.41kg	Cap sold separately
BPLR2BE-CT	Flush Face BPL Receiver, 3/4" NPT, GOLD, Size 2 - Cold Temp	3/4" NPTM	11x6x6cm | 0.44kg	Includes Cap ❄
BPLR2CE-CT	Flush Face BPL Receiver, 1" NPT, GOLD, Size 2 - Cold Temp	1" NPTM	11x6x6cm | 0.44kg	Includes Cap ❄
BPLN2BN-CT	Flush Face BPL Nozzle, 3/4" NPT, GOLD, Size 2 - Cold Temp	3/4" NPTF	9x5x5cm | 0.41kg	Cap sold separately ❄
BPLN2CN-CT	Flush Face BPL Nozzle, 1" NPT, GOLD, Size 2 - Cold Temp	1" NPTF	9x5x5cm | 0.41kg	Cap sold separately ❄

Caps on pages 81 & 82

Size 3 - Red

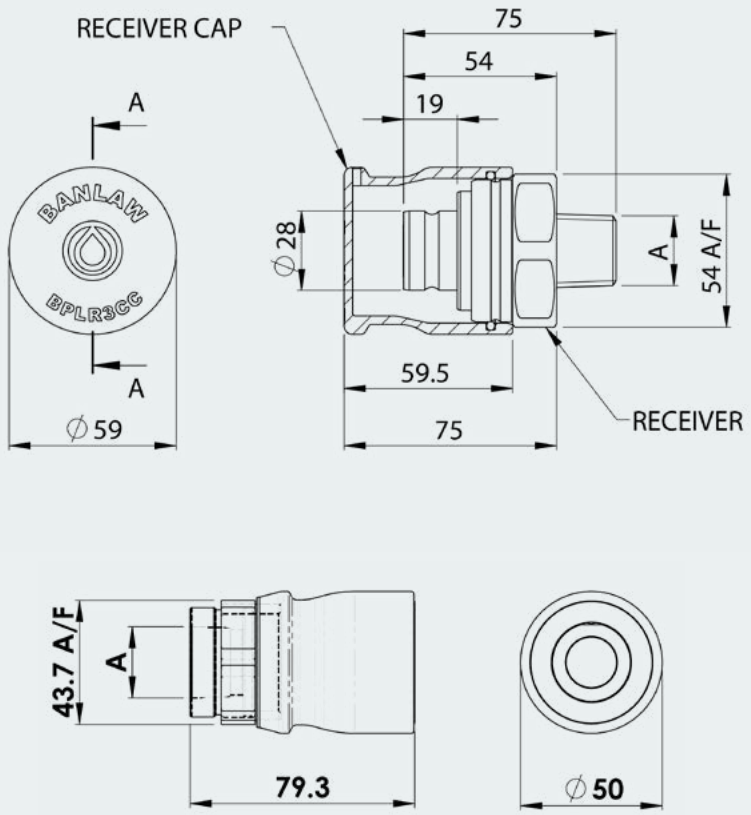

BPLN3BN

BPLR3BE

Part Number	Product Description	Tech Specs - A	Shipping - Dimensions & Weight	Items Included
BPLR3BE	Flush Face BPL Receiver, 3/4" NPT, RED, Size 3	3/4" NPTM	11x6x6cm | 0.44kg	Includes Cap
BPLR3CE	Flush Face BPL Receiver, 1" NPT, RED, Size 3	1" NPTM	11x6x6cm | 0.44kg	Includes Cap
BPLN3BN	Flush Face BPL Nozzle, 3/4" NPT, RED, Size 3	3/4" NPTF	10x5x5cm | 0.48kg	Cap sold separately
BPLN3CN	Flush Face BPL Nozzle, 1" NPT, RED, Size 3	1" NPTF	10x5x5cm | 0.48kg	Cap sold separately
BPLR3BE-CT	Flush Face BPL Receiver, 3/4" NPT, RED, Size 3 - Cold Temp	3/4" NPTM	11x6x6cm | 0.44kg	Includes Cap ❄
BPLR3CE-CT	Flush Face BPL Receiver, 1" NPT, RED, Size 3 - Cold Temp	1" NPTM	11x6x6cm | 0.44kg	Includes Cap ❄
BPLN3BN-CT	Flush Face BPL Nozzle, 3/4" NPT, RED, Size 3 - Cold Temp	3/4" NPTF	10x5x5cm | 0.48kg	Cap sold separately ❄
BPLN3CN-CT	Flush Face BPL Nozzle, 1" NPT, RED, Size 3 - Cold Temp	1" NPTF	10x5x5cm | 0.48kg	Cap sold separately ❄

Caps on pages 81 & 82

Size 4 - Black

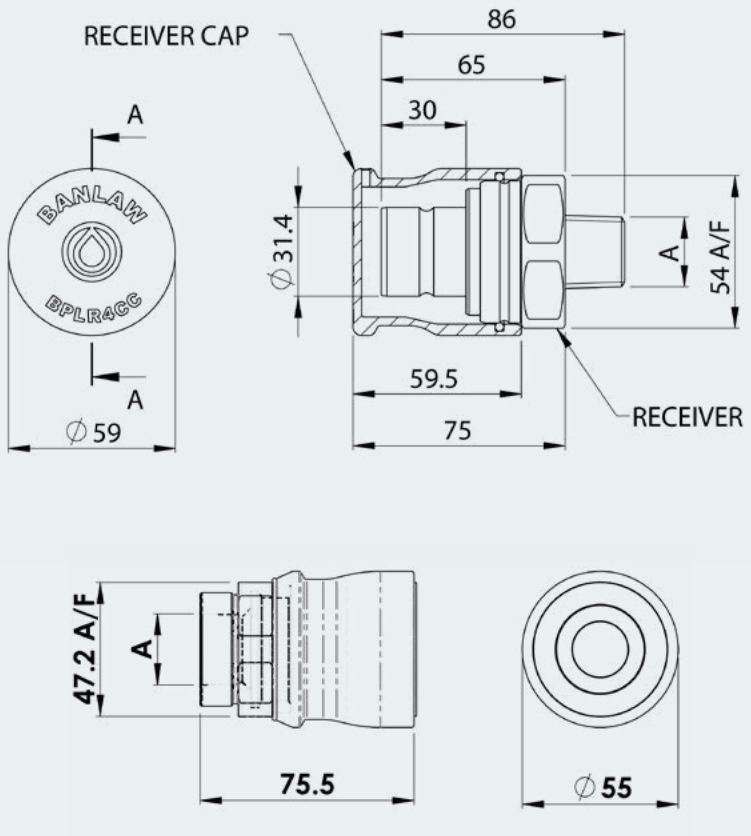

BPLN4BN

BPLR4CE

Part Number	Product Description	Tech Specs - A	Shipping - Dimensions & Weight	Items Included
BPLR4BE	Flush Face BPL Receiver, 3/4" NPT BLACK, Size 4	3/4" NPTM	11x6x6cm | 0.49kg	Includes Cap
BPLR4CE	Flush Face BPL Receiver, 1" NPT, BLACK, Size 4	1" NPTM	11x6x6cm | 0.49kg	Includes Cap
BPLN4BN	Flush Face BPL Nozzle, 3/4" NPT, BLACK, Size 4	3/4" NPTF	10x6x6cm | 0.66kg	Cap sold separately
BPLN4CN	Flush Face BPL Nozzle, 1" NPT, BLACK, Size 4	1" NPTF	10x6x6cm | 0.66kg	Cap sold separately
BPLR4BE-CT	Flush Face BPL Receiver, 3/4" NPT BLACK, Size 4 - Cold Temp	3/4" NPTM	11x6x6cm | 0.49kg	Includes Cap ❄
BPLR4CE-CT	Flush Face BPL Receiver, 1" NPT, BLACK, Size 4 - Cold Temp	1" NPTM	11x6x6cm | 0.49kg	Includes Cap ❄
BPLN4BN-CT	Flush Face BPL Nozzle, 3/4" NPT, BLACK, Size 4 - Cold Temp	3/4" NPTF	10x6x6cm | 0.66kg	Cap sold separately ❄
BPLN4CN-CT	Flush Face BPL Nozzle, 1" NPT, BLACK, Size 4 - Cold Temp	1" NPTF	10x6x6cm | 0.66kg	Cap sold separately ❄

Caps on pages 81 & 82

Size 6 - Blue

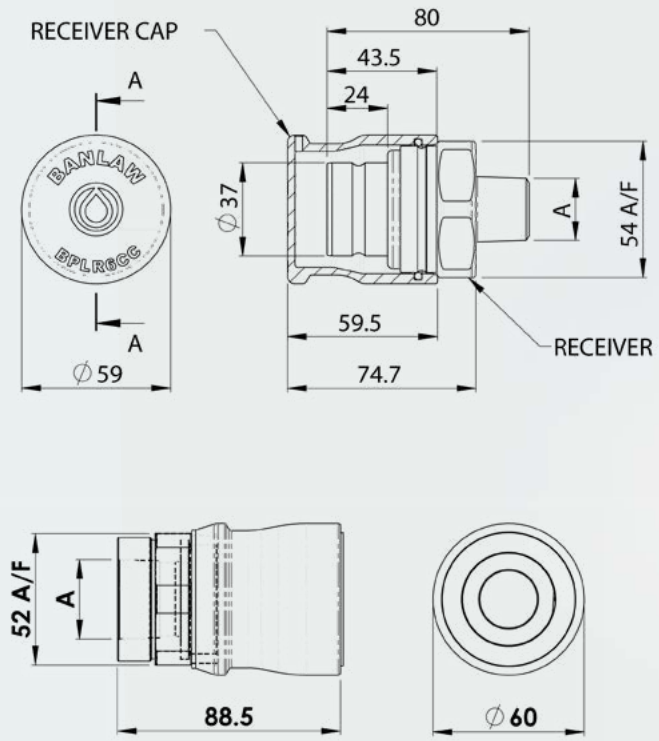

BPLR6CN

BPLN6CE

Part Number	Product Description	Tech Specs - A	Shipping - Dimensions & Weight	Items Included
BPLR6BE	Flush Face BPL Receiver, 3/4" NPT, BLUE, Size 6	3/4" NPTM	11x6x6cm | 0.56kg	Includes Cap
BPLR6CE	Flush Face BPL Receiver, 1" NPT, BLUE, Size 6	1" NPTM	11x6x6cm | 0.56kg	Includes Cap
BPLR6DE	Flush Face BPL Receiver, 1-1/4" NPT, BLUE, Size 6	1-1/4" NPTM	11x6x6cm | 0.57kg	Includes Cap
BPLN6CN	Flush Face BPL Nozzle, 1" NPT, BLUE, Size 6	1" NPTF	12x6x6cm | 0.87kg	Cap sold separately
BPLN6DN	Flush Face BPL Nozzle, 1-1/4" NPT, BLUE, Size 6	1-1/4" NPTF	12x6x6cm | 0.87kg	Cap sold separately
BPLR6BE-CT	Flush Face BPL Receiver, 3/4" NPT, BLUE, Size 6 - Cold Temp	3/4" NPTM	11x6x6cm | 0.56kg	Includes Cap ❄
BPLR6CE-CT	Flush Face BPL Receiver, 1" NPT, BLUE, Size 6 - Cold Temp	1" NPTM	11x6x6cm | 0.56kg	Includes Cap ❄
BPLR6DE-CT	Flush Face BPL Receiver, 1-1/4" NPT, BLUE, Size 6 - Cold Temp	1-1/4" NPTM	11x6x6cm | 0.57kg	Includes Cap ❄
BPLN6CN-CT	Flush Face BPL Nozzle, 1" NPT, BLUE, Size 6 - Cold Temp	1" NPTF	12x6x6cm | 0.87kg	Cap sold separately ❄
BPLN6DN-CT	Flush Face BPL Nozzle, 1-1/4" NPT, BLUE, Size 6 - Cold Temp	1-1/4" NPTF	12x6x6cm | 0.87kg	Cap sold separately ❄

Caps on pages 81 & 82

Size 5 - Green

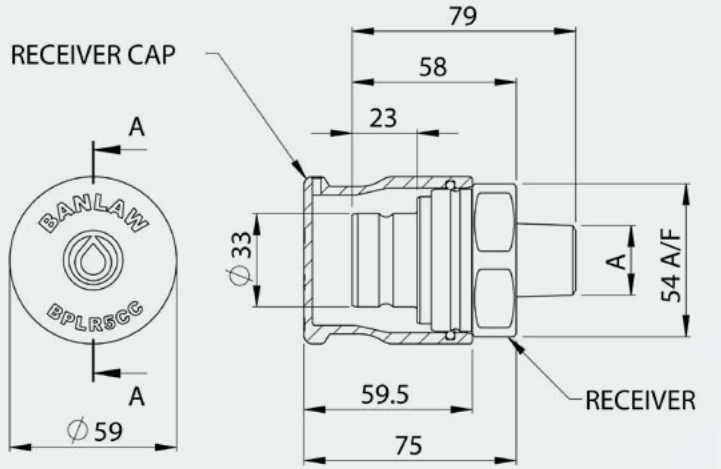

BPLN5BN

BPLR5CE

Part Number	Product Description	Tech Specs - A	Shipping - Dimensions & Weight	Items Included
BPLR5BE	Flush Face BPL Receiver, 3/4" NPT, GREEN, Size 5	3/4" NPTM	11x6x6cm | 0.51kg	Includes Cap
BPLR5CE	Flush Face BPL Receiver, 1" NPT, GREEN, Size 5	1" NPTM	11x6x6cm | 0.51kg	Includes Cap
BPLN5BN	Flush Face BPL Nozzle, 3/4" NPT, GREEN, Size 5	3/4" NPTF	11x6x6cm | 0.7kg	Cap sold separately
BPLN5CN	Flush Face BPL Nozzle, 1" NPT, GREEN, Size 5	1" NPTF	11x6x6cm | 0.7kg	Cap sold separately
BPLR5BE-CT	Flush Face BPL Receiver, 3/4" NPT, GREEN, Size 5- Cold Temp	3/4" NPTM	11x6x6cm | 0.51kg	Includes Cap ❄
BPLR5CE-CT	Flush Face BPL Receiver, 1" NPT, GREEN, Size 5 - Cold Temp	1" NPTM	11x6x6cm | 0.51kg	Includes Cap ❄
BPLN5BN-CT	Flush Face BPL Nozzle, 3/4" NPT, GREEN, Size 5 - Cold Temp	3/4" NPTF	11x6x6cm | 0.7kg	Cap sold separately ❄
BPLN5CN-CT	Flush Face BPL Nozzle, 1" NPT, GREEN, Size 5 - Cold Temp	1" NPTF	11x6x6cm | 0.7kg	Cap sold separately ❄

Caps on pages 81 & 82

Size 7 - Purple

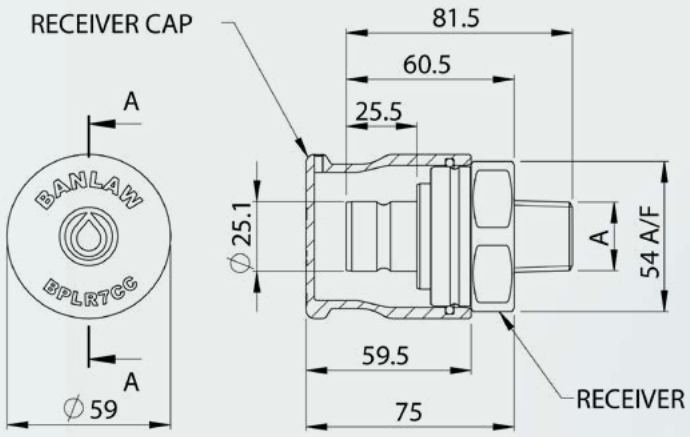

BPLN7BN

BPLR7CE

Part Number	Product Description	Tech Specs - A	Shipping - Dimensions & Weight	Items Included
BPLR7BE	Flush Face BPL Receiver, 3/4" NPT, PURPLE, Size 7	3/4" NPTM	11x6x6cm | 0.44kg	Includes Cap
BPLR7CE	Flush Face BPL Receiver, 1" NPT, PURPLE, Size 7	1" NPTM	11x6x6cm | 0.44kg	Includes Cap
BPLN7BN	Flush Face BPL Nozzle, 3/4" NPT, PURPLE, Size 7	3/4" NPTF	11x5x5cm | 0.52kg	Cap sold separately
BPLN7CN	Flush Face BPL Nozzle, 1" NPT, PURPLE, Size 7	1" NPTF	11x5x5cm | 0.52kg	Cap sold separately
BPLR7BE-CT	Flush Face BPL Receiver, 3/4" NPT, PURPLE, Size 7 - Cold Temp	3/4" NPTM	11x6x6cm | 0.44kg	Includes Cap ❄
BPLR7CE-CT	Flush Face BPL Receiver, 1" NPT, PURPLE, Size 7 - Cold Temp	1" NPTM	11x6x6cm | 0.44kg	Includes Cap ❄
BPLN7BN-CT	Flush Face BPL Nozzle, 3/4" NPT, PURPLE, Size 7 - Cold Temp	3/4" NPTF	11x5x5cm | 0.52kg	Cap sold separately ❄
BPLN7CN-CT	Flush Face BPL Nozzle, 1" NPT, PURPLE, Size 7 - Cold Temp	1" NPTF	11x5x5cm | 0.52kg	Cap sold separately ❄

Caps on pages 81 & 82

Size 8 - Platinum/Grey

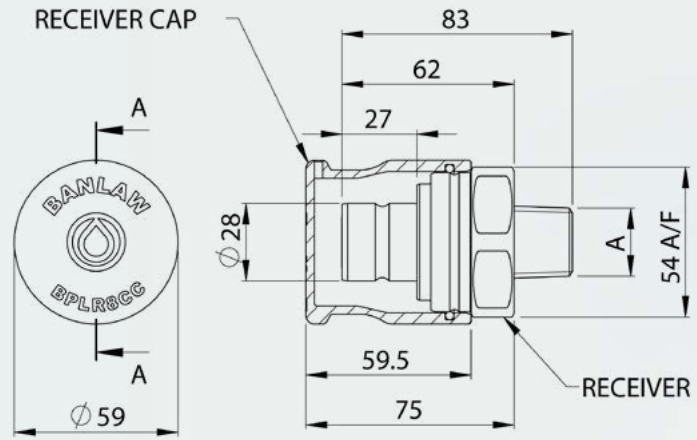

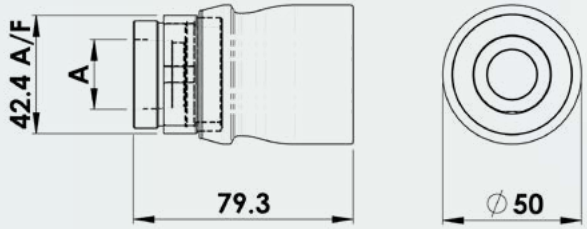

BPLN8BN

BPLR8CE

Part Number	Product Description	Tech Specs - A	Shipping - Dimensions & Weight	Items Included
BPLR8BE	Flush Face BPL Receiver, 3/4" NPT, PLATINUM/GREY, Size 8	3/4" NPTM	11x6x6cm | 0.45kg	Includes Cap
BPLR8CE	Flush Face BPL Receiver, 1" NPT, PLATINUM/GREY, Size 8	1" NPTM	11x6x6cm | 0.45kg	Includes Cap
BPLN8BN	Flush Face BPL Nozzle, 3/4" NPT, PLATINUM/GREY, Size 8	3/4" NPTF	11x5x5cm | 0.58kg	Cap sold separately
BPLN8CN	Flush Face BPL Nozzle, 1" NPT, PLATINUM/GREY, Size 8	1" NPTF	11x5x5cm | 0.58kg	Cap sold separately
BPLR8BE-CT	Flush Face BPL Receiver, 3/4" NPT, PLATINUM/GREY, Size 8 - Cold Temp	3/4" NPTM	11x6x6cm | 0.45kg	Includes Cap ❄
BPLR8CE-CT	Flush Face BPL Receiver, 1" NPT, PLATINUM/GREY, Size 8 - Cold Temp	1" NPTM	11x6x6cm | 0.45kg	Includes Cap ❄
BPLN8BN-CT	Flush Face BPL Nozzle, 3/4" NPT, PLATINUM/GREY, Size 8 - Cold Temp	3/4" NPTF	11x5x5cm | 0.58kg	Cap sold separately ❄
BPLN8CN-CT	Flush Face BPL Nozzle, 1" NPT, PLATINUM/GREY, Size 8 - Cold Temp	1" NPTF	11x5x5cm | 0.58kg	Cap sold separately ❄

Caps on pages 81 & 82

Size 9 - Bronze/Tan

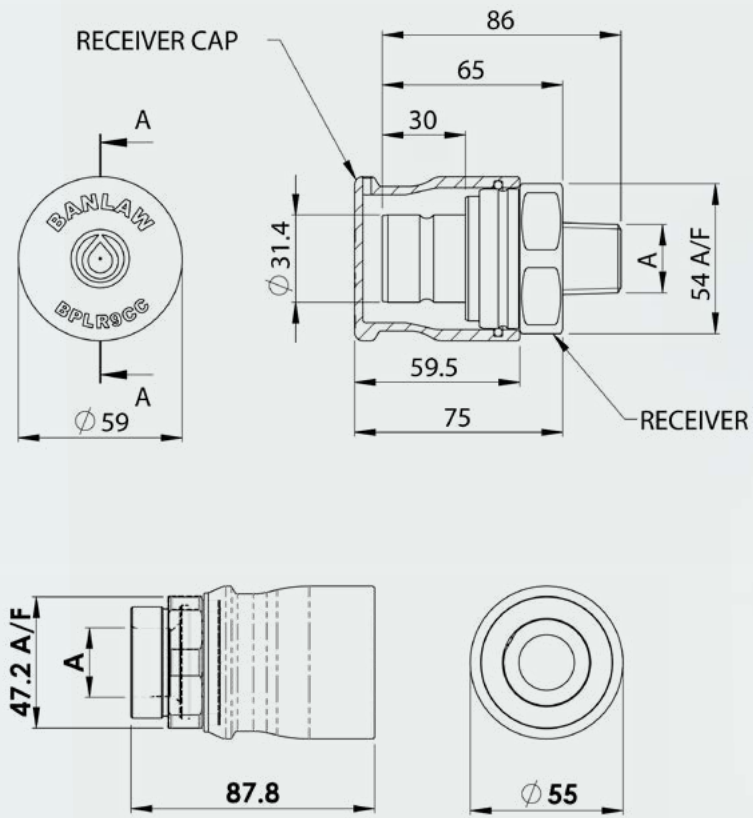

BPLN9BN

BPLR9BE

Part Number	Product Description	Tech Specs - A	Shipping - Dimensions & Weight	Items Included
BPLR9BE	Flush Face BPL Receiver, 3/4" NPT, BRONZE/TAN, Size 9	3/4" NPTM	11x6x6cm | 0.51kg	Includes Cap
BPLR9CE	Flush Face BPL Receiver, 1" NPT, BRONZE/TAN, Size 9	1" NPTM	11x6x6cm | 0.51kg	Includes Cap
BPLN9BN	Flush Face BPL Nozzle, 3/4" NPT, BRONZE/TAN, Size 9	3/4" NPTF	11x6x6cm | 0.79kg	Cap sold separately
BPLN9CN	Flush Face BPL Nozzle, 1" NPT, BRONZE/TAN, Size 9	1" NPTF	11x6x6cm | 0.79kg	Cap sold separately
BPLR9BE-CT	Flush Face BPL Receiver, 3/4" NPT, BRONZE/TAN, Size 9 - Cold Temp	3/4" NPTM	11x6x6cm | 0.51kg	Includes Cap ❄
BPLR9CE-CT	Flush Face BPL Receiver, 1" NPT, BRONZE/TAN, Size 9 - Cold Temp	1" NPTM	11x6x6cm | 0.51kg	Includes Cap ❄
BPLN9BN-CT	Flush Face BPL Nozzle, 3/4" NPT, BRONZE/TAN, Size 9 - Cold Temp	3/4" NPTF	11x6x6cm | 0.79kg	Cap sold separately ❄
BPLN9CN-CT	Flush Face BPL Nozzle, 1" NPT, BRONZE/TAN, Size 9 - Cold Temp	1" NPTF	11x6x6cm | 0.79kg	Cap sold separately ❄

Caps on pages 81 & 82

Size 10 - Orange

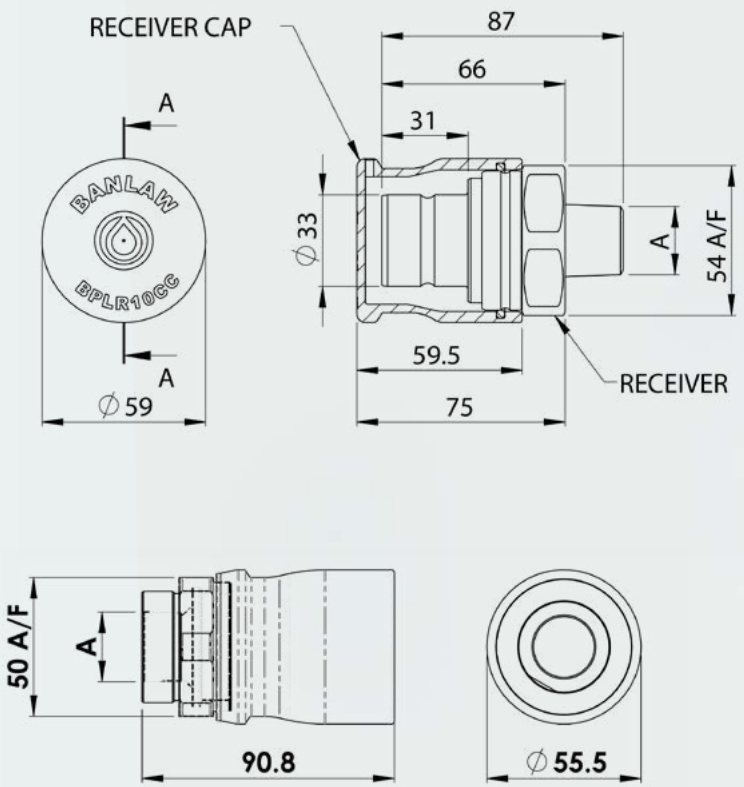

BPLN10BN

BPLR10CE

Part Number	Product Description	Tech Specs - A	Shipping - Dimensions & Weight	Items Included
BPLR10BE	Flush Face BPL Receiver, 3/4" NPT, ORANGE, Size 10	3/4" NPTM	11x6x6cm | 0.53kg	Includes Cap
BPLR10CE	Flush Face BPL Receiver, 1" NPT, ORANGE, Size 10	1" NPTM	11x6x6cm | 0.53kg	Includes Cap
BPLN10BN	Flush Face BPL Nozzle, 3/4" NPT, ORANGE, Size 10	3/4" NPTF	11x6x6cm | 0.84kg	Cap sold separately
BPLN10CN	Flush Face BPL Nozzle, 1" NPT, ORANGE, Size 10	1" NPTF	11x6x6cm | 0.84kg	Cap sold separately
BPLR10BE-CT	Flush Face BPL Receiver, 3/4" NPT, ORANGE, Size 10 - Cold Temp	3/4" NPTM	11x6x6cm | 0.53kg	Includes Cap ❄
BPLR10CE-CT	Flush Face BPL Receiver, 1" NPT, ORANGE, Size 10 - Cold Temp	1" NPTM	11x6x6cm | 0.53kg	Includes Cap ❄
BPLN10BN-CT	Flush Face BPL Nozzle, 3/4" NPT, ORANGE, Size 10 - Cold Temp	3/4" NPTF	11x6x6cm | 0.84kg	Cap sold separately ❄
BPLN10CN-CT	Flush Face BPL Nozzle, 1" NPT, ORANGE, Size 10 - Cold Temp	1" NPTF	11x6x6cm | 0.84kg	Cap sold separately ❄

Caps on pages 81 & 82

Size 11 - Silver

The Size 11 nozzle and receiver were specifically designed to connect whilst subjected to residual line pressure.

They can be used with oils and other fluids used in mining, rail, ports and other heavy industries.

This coupling is suitable for underground mines requiring a very robust, all-steel flush face coupling.

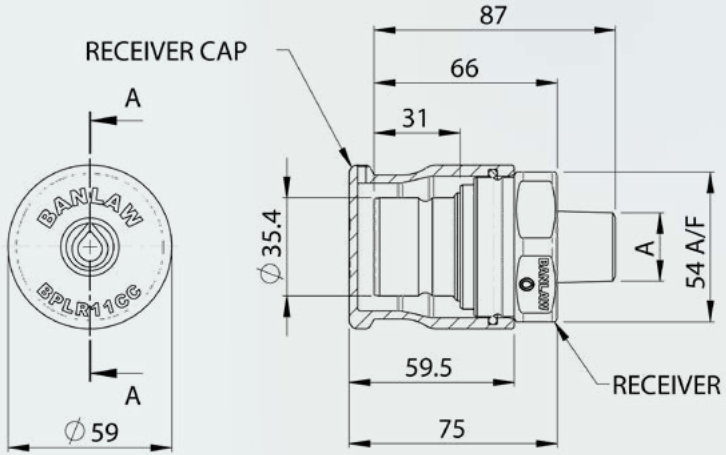

BPLR11BE

BPLN11BP

Part Number	Product Description	Tech Specs - A	Shipping - Dimensions & Weight	Items Included
BPLR11BE	Flush Face BPL Receiver, 3/4" NPT, SILVER, Size 11	3/4" NPTM	11x7x7cm | 0.82kg	Includes Cap
BPLR11CE	Flush Face BPL Receiver, 1" NPT, SILVER, Size 11	1" NPTM	11x7x7cm | 0.82kg	Includes Cap
BPLN11BP	Flush Face BPL Nozzle, 3/4" NPT, SILVER, Size 11	3/4" NPTF	10x6x6cm | 1.2kg	Cap sold separately
BPLN11CP	Flush Face BPL Nozzle, 1" NPT, SILVER, Size 11	1" NPTF	11x7x7cm | 0.84kg	Cap sold separately
BPLR11BE-CT	Flush Face BPL Receiver, 3/4" NPT, SILVER, Size 11 - Cold Temp	3/4" NPTM	11x7x7cm | 0.82kg	Includes Cap ❄
BPLR11CE-CT	Flush Face BPL Receiver, 1" NPT, SILVER, Size 11 - Cold Temp	1" NPTM	11x7x7cm | 0.82kg	Includes Cap ❄
BPLN11BP-CT	Flush Face BPL Nozzle, 3/4" NPT, SILVER, Size 11 - Cold Temp	3/4" NPTF	10x6x6cm | 1.2kg	Cap sold separately ❄
BPLN11CP-CT	Flush Face BPL Nozzle, 1" NPT, SILVER, Size 11 - Cold Temp	1" NPTF	11x7x7cm | 0.84kg	Cap sold separately ❄

Caps on pages 81 & 82

Overfill Protection

Banlaw FillSafe™ overfill protection systems ensure safe, fast, reliable filling, with zero pressure build-up in the tank.

We manufacture both mechanical and electronic solutions for tank overfill protection, catering to storage tanks and diesel-powered machines of all sizes.

Banlaw FillSafe™ products are designed to protect valuable machine assets by giving our clients the widest choice of zero tank pressure overfill protection systems available on the market.

Go to

FillSafe Zero

FillSafe Power

FillSafe Power

Our electronic tank overfill protection system is unrestricted by flow rate, and is suitable for use with many fluid types.

It is considered the go-to solution for mining excavators and railway locomotives; but is also perfect for other critical equipment, where very high flow rates, fire-safe installation, or multiple fill levels are required.

The FillSafe Power system requires 4 basic components, a Controller, an Actuated Valve, a Level Switch and a simple wiring harness to connect them all together.

Go to

- Controller
- Level Switch
- Electric Actuated Valve
- Check Valve

Controller

The Controller is the heart of the FillSafe Power system. It receives an input from a Level Switch to indicate when the tank has reached the required fill level. Once the Level Switch is triggered, the Controller will automatically close an actuated valve.

FillSafe Power can be configured to suit any machine and is the only overfill protection system that indicates exactly when the tank is full, via a controller feedback LED.

Each controller is available in a range of configurations. These include:

- A choice of Duetch Plug, MilSpec Plug, or M20 conduit entry termination.
- Automatic close of valve functionailty in 15, 30, 45 or minutes after "FILL" button is pressed.
- Left Hand or Right Hand termination entry relative to the orientation of the interface.

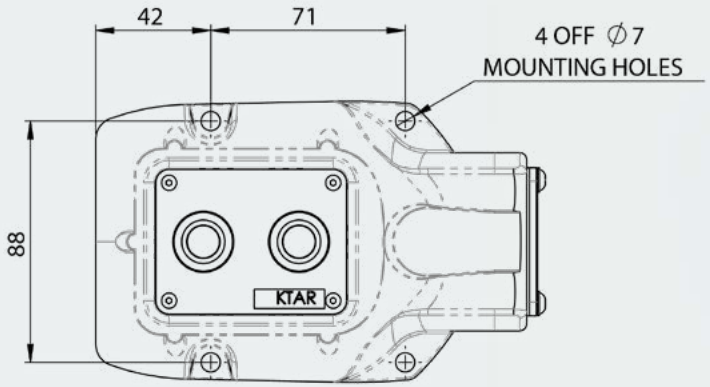

BFSP2RKDAR

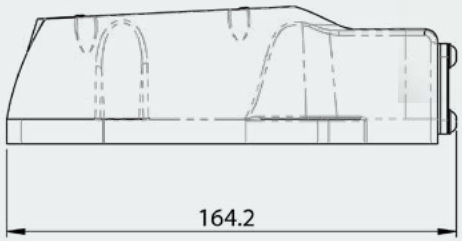

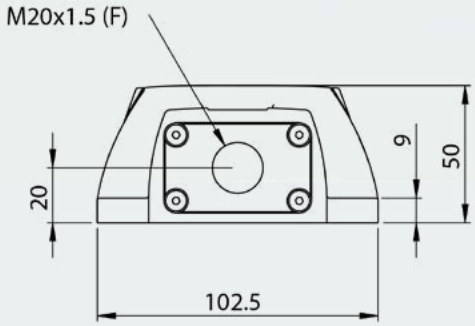

Part Number	Product Description	Tech Specs	Shipping - Dimensions & Weight
BFSP2RKDAL	FillSafe Power Controller, 24VDC, Deutsch, 15min, Left Hand	24VDC, DCH, 15MIN, L	19x9x5cm | 1kg
BFSP2RKDAR	FillSafe Power Controller, 24VDC, Deutsch, 15min, Right Hand	24VDC, DCH, 15MIN, R	19x9x5cm | 1kg
BFSP2RKDBL	FillSafe Power Controller, 24VDC, Deutsch, 30min, Left Hand	24VDC, DCH, 30MIN, L	19x9x5cm | 1kg
BFSP2RKDBR	FillSafe Power Controller, 24VDC, Deutsch, 30min, Right Hand	24VDC, DCH, 30MIN, R	19x9x5cm | 1kg
BFSP2RKDCL	FillSafe Power Controller, 24VDC, Deutsch, 45min, Left Hand	24VDC, DCH, 45MIN, L	19x9x5cm | 1kg
BFSP2RKDCR	FillSafe Power Controller, 24VDC, Deutsch, 45min, Right Hand	24VDC, DCH, 45MIN, R	19x9x5cm | 1kg
BFSP2RKDDL	FillSafe Power Controller, 24VDC, Deutsch, 60min, Left Hand	24VDC, DCH, 60MIN, L	19x9x5cm | 1kg
BFSP2RKDDR	FillSafe Power Controller, 24VDC, Deutsch, 60min, Right Hand	24VDC, DCH, 60MIN, R	19x9x5cm | 1kg
BFSP2RKMAL	FillSafe Power Controller, 24VDC, Millspec, 15min, Left Hand	24VDC, MIL, 15MIN, L	19x9x5cm | 1kg
BFSP2RKMAR	FillSafe Power Controller, 24VDC, Millspec, 15min Right Hand	24VDC, MIL, 15MIN, R	19x9x5cm | 1kg
BFSP2RKMBL	FillSafe Power Controller, 24VDC, Millspec, 30min, Left Hand	24VDC, MIL, 30MIN, L	19x9x5cm | 1kg

Continued on next page...

Controller *(continued)*

Part Number	Product Description	Tech Specs	Shipping - Dimensions & Weight
BFSP2RKMBR	FillSafe Power Controller, 24VDC, Millspec, 30min Right Hand	24VDC, MIL, 30MIN, R	19x9x5cm | 1kg
BFSP2RKMCL	FillSafe Power Controller, 24VDC, Millspec, 45min, Left Hand	24VDC, MIL, 45MIN, L	19x9x5cm | 1kg
BFSP2RKMCR	FillSafe Power Controller, 24VDC, Millspec, 45min Right Hand	24VDC, MIL, 45MIN, R	19x9x5cm | 1kg
BFSP2RKMDL	FillSafe Power Controller, 24VDC, Millspec, 60min, Left Hand	24VDC, MIL, 60MIN, L	19x9x5cm | 1kg
BFSP2RKMDR	FillSafe Power Controller, 24VDC, Millspec, 60min Right Hand	24VDC, MIL, 60MIN, R	19x9x5cm | 1kg
BFSP2RKTAL	FillSafe Power Controller, 24VDC, M20, 15min, Left Hand	24VDC, M20, 15MIN, L	19x9x5cm | 1kg
BFSP2RKTAR	FillSafe Power Controller, 24VDC, M20, 15min, Right Hand	24VDC, M20, 15MIN, R	19x9x5cm | 1kg
BFSP2RKTBL	FillSafe Power Controller, 24VDC, M20, 30min, Left Hand	24VDC, M20, 30MIN, L	19x9x5cm | 1kg
BFSP2RKTBR	FillSafe Power Controller, 24VDC, M20, 30min, Right Hand	24VDC, M20, 30MIN, R	19x9x5cm | 1kg
BFSP2RKTCL	FillSafe Power Controller, 24VDC, M20, 45min, Left Hand	24VDC, M20, 45MIN, L	19x9x5cm | 1kg
BFSP2RKTCR	FillSafe Power Controller, 24VDC, M20, 45min, Right Hand	24VDC, M20, 45MIN, R	19x9x5cm | 1kg
BFSP2RKTDL	FillSafe Power Controller, 24VDC, M20, 60min, Left Hand	24VDC, M20, 60MIN, L	19x9x5cm | 1kg
BFSP2RKTDR	FillSafe Power Controller, 24VDC, M20, 60min, Right Hand	24VDC, M20, 60MIN, R	19x9x5cm | 1kg
BFSP2RNDAL	FillSafe Power Controller, 12VDC, Deutsch, 15min, Left Hand	12VDC, DCH, 15MIN, L	19x9x5cm | 1kg
BFSP2RNDAR	FillSafe Power Controller, 12VDC, Deutsch, 15min, Right Hand	12VDC, DCH, 15MIN, R	19x9x5cm | 1kg
BFSP2RNDBL	FillSafe Power Controller, 12VDC, Deutsch, 30min, Left Hand	12VDC, DCH, 30MIN, L	19x9x5cm | 1kg
BFSP2RNDBR	FillSafe Power Controller, 12VDC, Deutsch, 30min, Right Hand	12VDC, DCH, 30MIN, R	19x9x5cm | 1kg
BFSP2RNDCL	FillSafe Power Controller, 12VDC, Deutsch, 45min, Left Hand	12VDC, DCH, 45MIN, L	19x9x5cm | 1kg
BFSP2RNDCR	FillSafe Power Controller, 12VDC, Deutsch, 45min, Right Hand	12VDC, DCH, 45MIN, R	19x9x5cm | 1kg
BFSP2RNDDL	FillSafe Power Controller, 12VDC, Deutsch, 60min, Left Hand	12VDC, DCH, 60MIN, L	19x9x5cm | 1kg
BFSP2RNDDR	FillSafe Power Controller, 12VDC, Deutsch, 60min, Right Hand	12VDC, DCH, 60MIN, R	19x9x5cm | 1kg
BFSP2RNMAL	FillSafe Power Controller, 12VDC, Millspec, 15min, Left Hand	12VDC, MIL, 15MIN, L	19x9x5cm | 1kg
BFSP2RNMAR	FillSafe Power Controller, 12VDC, Millspec, 15min Right Hand	12VDC, MIL, 15MIN, R	19x9x5cm | 1kg
BFSP2RNMBL	FillSafe Power Controller, 12VDC, Millspec, 30min, Left Hand	12VDC, MIL, 30MIN, L	19x9x5cm | 1kg
BFSP2RNMBR	FillSafe Power Controller, 12VDC, Millspec, 30min Right Hand	12VDC, MIL, 30MIN, R	19x9x5cm | 1kg
BFSP2RNMCL	FillSafe Power Controller, 12VDC, Millspec, 45min, Left Hand	12VDC, MIL, 45MIN, L	19x9x5cm | 1kg
BFSP2RNMCR	FillSafe Power Controller, 12VDC, Millspec, 45min Right Hand	12VDC, MIL, 45MIN, R	19x9x5cm | 1kg
BFSP2RNMDL	FillSafe Power Controller, 12VDC, Millspec, 60min, Left Hand	12VDC, MIL, 60MIN, L	19x9x5cm | 1kg
BFSP2RNMDR	FillSafe Power Controller, 12VDC, Millspec, 60min Right Hand	12VDC, MIL, 60MIN, R	19x9x5cm | 1kg
BFSP2RNTAL	FillSafe Power Controller, 12VDC, M20, 15min, Left Hand	12VDC, M20, 15MIN, L	19x9x5cm | 1kg
BFSP2RNTAR	FillSafe Power Controller, 12VDC, M20, 15min, Right Hand	12VDC, M20, 15MIN, R	19x9x5cm | 1kg
BFSP2RNTBL	FillSafe Power Controller, 12VDC, M20, 30min, Left Hand	12VDC, M20, 30MIN, L	19x9x5cm | 1kg
BFSP2RNTBR	FillSafe Power Controller, 12VDC, M20, 30min, Right Hand	12VDC, M20, 30MIN, R	19x9x5cm | 1kg
BFSP2RNTCL	FillSafe Power Controller, 12VDC, M20, 45min, Left Hand	12VDC, M20, 45MIN, L	19x9x5cm | 1kg
BFSP2RNTCR	FillSafe Power Controller, 12VDC, M20, 45min, Right Hand	12VDC, M20, 45MIN, R	19x9x5cm | 1kg
BFSP2RNTDL	FillSafe Power Controller, 12VDC, M20, 60min, Left Hand	12VDC, M20, 60MIN, L	19x9x5cm | 1kg
BFSP2RNTDR	FillSafe Power Controller, 12VDC, M20, 60min, Right Hand	12VDC, M20, 60MIN, R	19x9x5cm | 1kg

Level Switch

Custom Level Switches are available to support top and side mount applications, as well as multiple pre-set float levels. Simply contact Banlaw with your design requirements.

BFSZP3007

Part Number	Product Description	Tech Specs	Shipping - Dimensions & Weight
BFSZP3011A	FillSafe Level Switch Assembly	FLANGE, 5 FLOAT	
BFSZP3007	FillSafe Level switch ZP3-007 2 float	1" BSPM, 2 FLOAT	34x7x7cm | 0.48kg

Electric Actuated Valve

FillSafe Power controls any type of electric, pneumatic or fire-safe actuated 'open bore' ball valve to achieve the least pressure drop possible.

Other actuated style valves (e.g. solenoid valves) may be used to suit a wide variety of applications and fluid types – not just diesel fuels.

1" to 4" are the most commonly used sizes.

Contact Banlaw if you require advice or supply of an alternate ball valve to meet your specific business requirements.

Part Number	Product Description	Tech Specs
BFSZP3032H	FillSafe Ball Valve 2 1/2", F/S, ANSI 150, C/S, HQ015 24VDC, Harness	2-1/2" ANSI150, HARNESS

FillSafe Zero

Our patented# mechanical tank overfill protection system enables safe, high-speed diesel refuelling, and is cost-efficient to install on a wide range of vehicles, and stationary tanks.

Product variants are available that fit directly into a 2” shell, refuel at up to 1000lpm, include a Dry Break Receiver, or are provided with process connections for in-line deployment.

A Banlaw FillSafe™ Zero system consists of a Flow Control Valve, a Level Sensor, and a Pilot Line. The Flow Control Valve closes when a Level Sensor detects that the tank is full, stopping the flow of diesel from entering the tank.

The Banlaw FillSafe Zero Range is configurable to allow a choice of either an internal or external pilot line.

Go to

- Flow Control Valve - 2”
- Flow Control Valve - 3”
- Flow Control Valve - 4”
- Level Sensor
- Non-Level-Sensing Vent
- Vented Level Sensor
- Pilot Line

#Refer to website: ‘Patents and Patents Pending’ – see www.banlaw.com

Flow Control Valve 2”

Our 2” Flow Control Valves are designed to mount in any standard industry receiver shell. They support diesel flow rates from 100lpm to 800lpm.

These Flow Control Valves can be mounted directly to the fuel tank on a vehicle. To support many installation scenarios, they are available with or without an integrated receiver, and come in either internal or external pilot line configuration.

LEFT TO RIGHT: BFCV50E / BFCV50ES / BFCV50NPTF / BFCV50

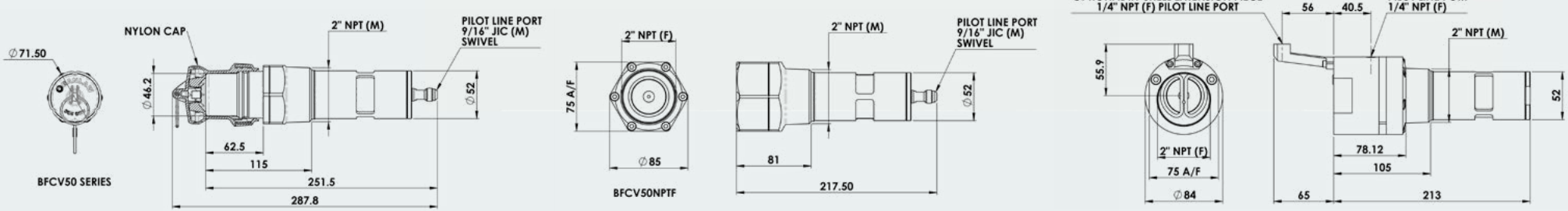

Part Number	Product Description	Tech Specs	Shipping - Dimensions & Weight	Items Included	
BFCV50	FillSafe Zero, Flow control Valve, 2” NPT (M), c/w Mining Receiver	2” NPTM	29x8x8cm | 1.73kg	Includes Cap	
BFCV50E	FillSafe Zero, Flow control Valve, 2” NPT (MF), External Pilot Line	2” NPTMF	23x9x9cm | 1.9kg		❄
BFCV50ES	FillSafe Zero, Flow control Valve, 2” NPT (MF), In Shell, External Pilot Line	2” NPTMF	28x11x8cm | 2kg		❄
BFCV50NPTF	FillSafe Zero, Flow control Valve, 2” NPT (MF), Internal Pilot Line	2” NPTMF	22x8x8cm | 1.77kg		❄
BFCV50R	FillSafe Zero, Flow control Valve, 2” NPT (M) - c/w Rail Receiver	2” NPTM	29x8x8cm | 1.73kg	Includes Cap	
BFCV50-CT	FillSafe Zero, Flow control Valve, 2” NPT (M), c/w Mining Receiver - Cold Temp	2” NPTM	29x8x8cm | 1.73kg	Includes Cap	❄
BFCV50R-CT	FillSafe Zero, Flow control Valve, 2” NPT (M) - c/w Rail Receiver - Cold Temp	2” NPTM	29x8x8cm | 1.73kg	Includes Cap	❄

Servicing kits on page 78

Flow Control Valve 3”

Our 3” Flow Control Valve is purpose built for remote/in-line installations. It supports diesel flow rates from 200lpm to 950lpm.

This product features a rotating Pilot Line inlet collar for ease of external Pilot Line routing during installation.

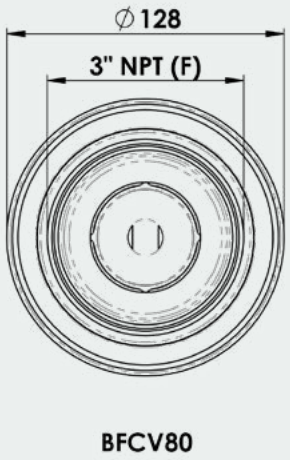

BFCV80

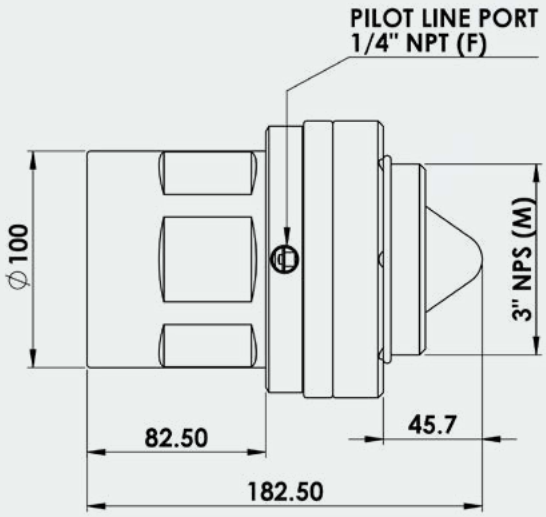

BFCV80

Part Number	Product Description	Tech Specs	Shipping - Dimensions & Weight
BFCV80	FillSafe Zero, Flow control Valve, 3” NPTF (inlet) x 3” NPSM (outlet), External Pilot Line	3”NPTFx3”NPSM	20x13x13cm | 2.3kg ❄

Flow Control Valve 4”

Our 4” Flow Control Valves come with integrated Dry Break Receivers.

The BFCV23 variants, support flow rates from 200lpm to 800lpm, and are compatible with our 800 Series Dry Break Nozzles (the industry standard size).

The BFCV43 supports flow rates from 400lpm to 1000lpm. It is compatible with our 1000 Series Dry Break Nozzle.

The 4” Flow Control Valves feature a rotating pilot line collar to assist with the routing of the External pilot line during installation.

These valves have the same 4” thread type as flow control valves on many diesel locomotives. This allows ease of conversions to allow a Banlaw Nozzle to be used to safely refuel a locomotive fuel tank.

BFCV23

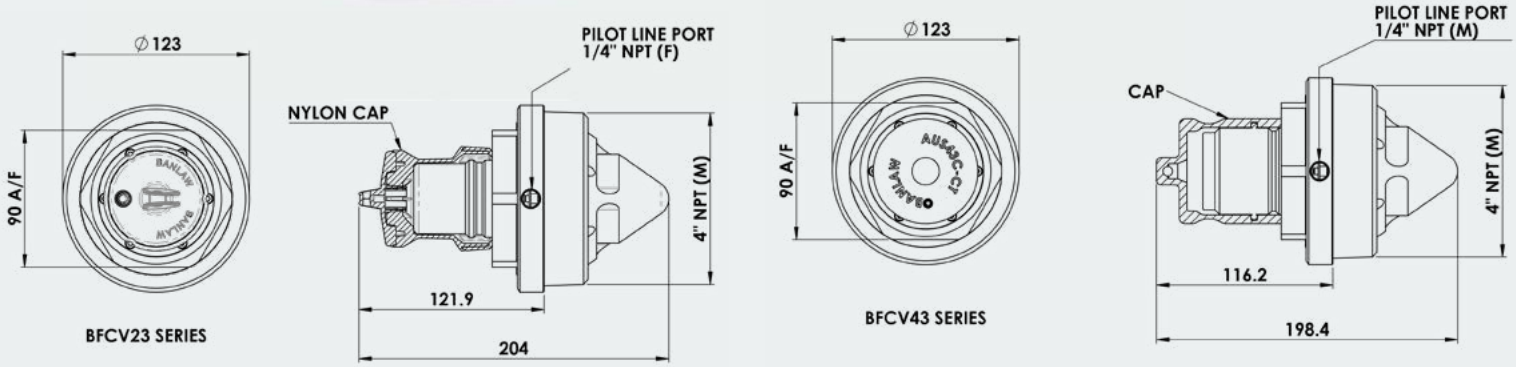

Part Number	Product Description	Tech Specs	Shipping - Dimensions & Weight	Items Included	
BFCV23	FillSafe Zero - Flow Control Valve, Suits 800 Series Mining Nozzle	4” NPTM	17x12x12cm | 2.02kg	Includes Cap	
BFCV23R	FillSafe Zero - Flow Control Valve, Suits 800 Series Rail Nozzle - Rail	4” NPTM	17x12x12cm | 2.02kg	Includes Cap	
BFCV43	FillSafe Zero - Flow Control Valve, Suits 1000 Series Nozzle	4” NPTM	17x12x12cm | 2.1kg	Includes Cap	
BFCV23-CT	FillSafe Zero - Flow Control Valve, Suits 800 Series Mining Nozzle - Cold Temp	4” NPTM	17x12x12cm | 2.02kg	Includes Cap	
BFCV23R-CT	FillSafe Zero - Flow Control Valve, Suits 800 Series Rail Nozzle - Rail - Cold Temp	4” NPTM	17x12x12cm | 2.02kg	Includes Cap	
BFCV43-CT	FillSafe Zero - Flow Control Valve, Suits 1000 Series Nozzle - Cold Temp	4” NPTM	17x12x12cm | 2.1kg	Includes Cap	

Servicing kits on page 78

Level Sensor

Our Non-Vented Level Sensors are designed for tanks with a separate means of tank venting.

The BLS40 and BLS100 feature External Dual Pilot Line Ports, and all 'B' product variants feature a External Single Pilot Line Port.

BLS40

BLS100B

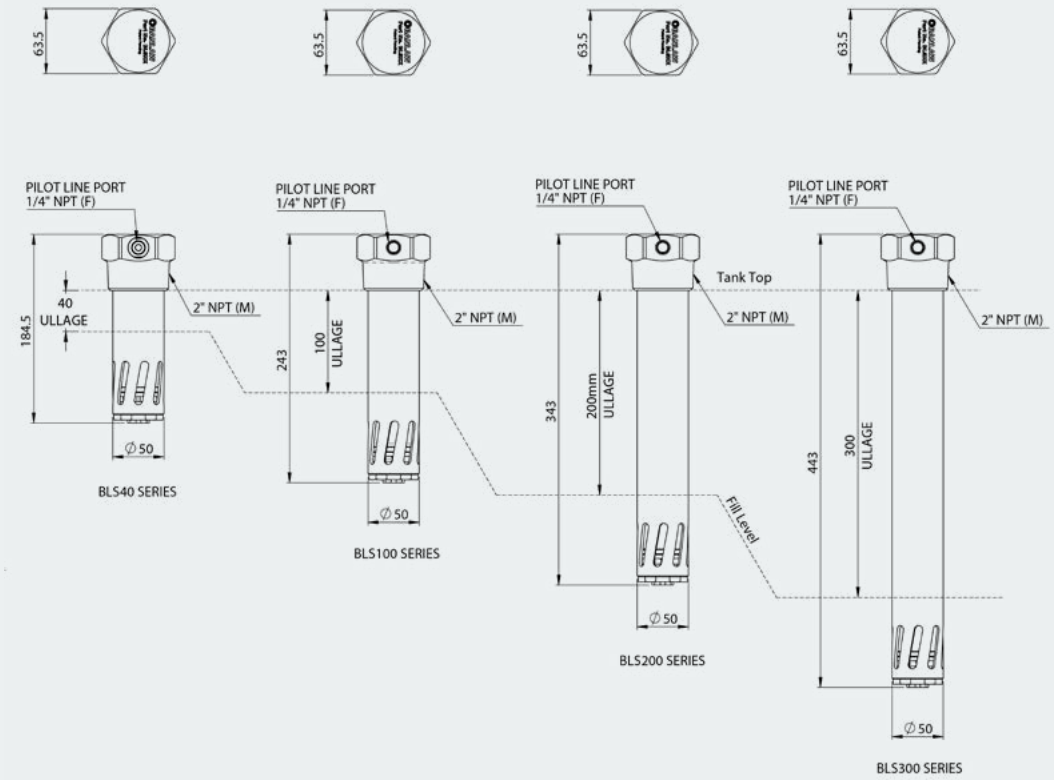

Part Number	Product Description	Tech Specs	Shipping - Dimensions & Weight	
BLS40B	FillSafe Zero, Level Sensor, 40mm (1.6") Nom. Tank Ullage	2" NPTM	20x7x7cm | 0.73kg	
BLS40	FillSafe Zero, Level Sensor, 40mm (1.6") Nom. Tank Ullage, Dual Pilot Line	2" NPTM	20x7x7cm | 0.73kg	
BLS100B	FillSafe Zero, Level Sensor, 100mm (4") Nom. Tank Ullage	2" NPTM	24x7x7cm | 0.82kg	
BLS100	FillSafe Zero, Level Sensor, 100mm (4") Nom. Tank Ullage, Dual Pilot Line	2" NPTM	24x7x7cm | 0.82kg	
BLS200B	FillSafe Zero, Level Sensor, 200mm (8") Nom. Tank Ullage	2" NPTM	34x7x7cm | 1.2kg	
BLS300B	FillSafe Zero, Level Sensor, 300mm (12") Nom. Tank Ullage	2" NPTM	44x7x7cm | 1.6kg	
BLS40B-CT	FillSafe Zero, Level Sensor, 40mm (1.6") Nom. Tank Ullage - Cold Temp	2" NPTM	20x7x7cm | 0.73kg	❄
BLS100B-CT	FillSafe Zero, Level Sensor, 100mm (4") Nom. Tank Ullage - Cold Temp	2" NPTM	24x7x7cm | 0.82kg	❄
BLS200B-CT	FillSafe Zero, Level Sensor, 200mm (8") Nom. Tank Ullage - Cold Temp	2" NPTM	34x7x7cm | 1.2kg	❄
BLS300B-CT	FillSafe Zero, Level Sensor, 300mm (12") Nom. Tank Ullage - Cold Temp	2" NPTM	44x7x7cm | 1.6kg	❄

Non-Level-Sensing Vent

The Non-Level-Sensing Vent is designed specifically for plant equipment with multiple fuel tanks that are filled via a common refuelling point. It is installed in the 'primary' tank, and connected to a Level Sensor in the 'auxiliary' tank.

Built in pressure relief valve available in either 16psi or 7psi to suit system design.

Top float to maintain system ullage in the primary fuel tank.

Anti-spill roll over protection feature built into the head.

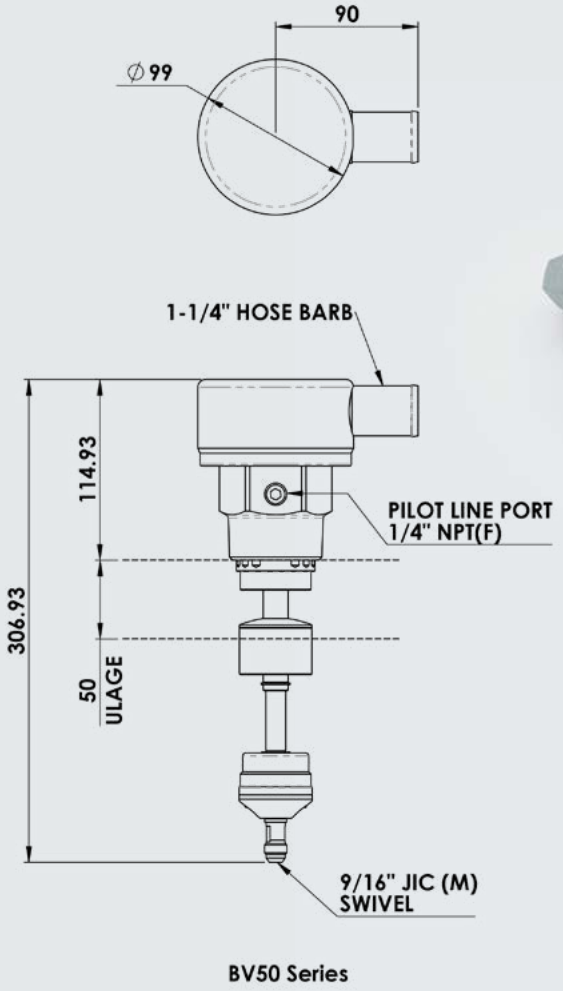

BV50 Series

BV50

Part Number	Product Description	Tech Specs	Shipping - Dimensions & Weight	
BV50	FillSafe Zero Vent Assembly, Non-level Sensor, 50mm (2") Nom. Tank Ullage, 16psi RED Cap	2" NPTM, 16PSI	15x16x30cm | 1.59kg	
BV50-L	FillSafe Zero Vent Assembly, Non-level Sensor, 50mm (2") Nom. Tank Ullage, 7psi GREEN Cap	2" NPTM, 7PSI	15x16x30cm | 1.59kg	
BV50-CT	FillSafe Zero Vent Assembly, Non-level Sensor, 50mm (2") Nom. Tank Ullage, 16psi RED Cap Cold Temp	2" NPTM, 16PSI	15x16x30cm | 1.59kg	❄
BV50-L-CT	FillSafe Zero Vent Assembly, Non-level Sensor, 50mm (2") Nom. Tank Ullage, 7psi GREEN Cap - Cold Temp	2" NPTM, 7PSI	15x16x30cm | 1.59kg	❄

Vented Level Sensor

Banlaw's Vented Level Sensors do much more than identify when a tank is full:

- Level sensing to the specified ullage
- Compatible with internal or external pilot line installations
- Suitable for vehicles with multiple fuel tanks
- 1,000 litres per minute (264gpm, 2,118 SCFH) air venting (exhaust and intake)
- 'Anti-spill' roll over protection
- Tank pressure gauge port
- Secondary (top) float for dry-break refuelling system 'shut-off' redundancy
- 110kPa (16psi) or 49kPa (7psi) pressure relief valve setting options

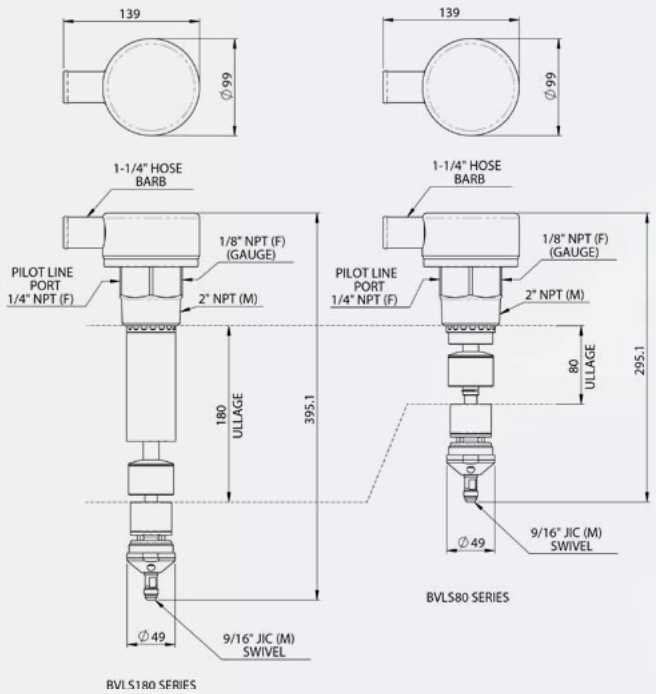

BVLS80

Part Number	Product Description	Tech Specs	Shipping - Dimensions & Weight	
BVLS80	FillSafe Zero, Vented Level Sensor, 80mm (3") Nom. Tank Ullage, 16psi RED Cap	2" NPTM, 16PSI	15x16x30cm | 1.69kg	
BVLS80-L	FillSafe Zero, Vented Level Sensor, 80mm (3") Nom. Tank Ullage, 7psi GREEN Cap	2" NPTM, 7PSI	15x16x30cm | 1.69kg	
BVLS180	FillSafe Zero, Vented Level Sensor, 180mm (7") Nom. Tank Ullage, 16psi RED Cap	2" NPTM, 16PSI	45x20x10cm | 2.2kg	
BVLS180-L	FillSafe Zero, Vented Level Sensor, 180mm (7") Nom. Tank Ullage, 7psi GREEN Cap	2" NPTM, 7PSI	45x20x12cm | 2.2kg	
BVLS80-CT	FillSafe Zero, Vented Level Sensor, 80mm (3") Nom. Tank Ullage, 16psi RED Cap - Cold Temp	2" NPTM, 16PSI	15x16x30cm | 1.69kg	❄
BVLS80-L-CT	FillSafe Zero, Vented Level Sensor, 80mm (3") Nom. Tank Ullage, 7psi GREEN Cap - Cold Temp	2" NPTM, 7PSI	15x16x30cm | 1.69kg	❄
BVLS180-CT	FillSafe Zero, Vented Level Sensor, 180mm (7") Nom. Tank Ullage, 16psi RED Cap - Cold Temp	2" NPTM, 16PSI	45x20x11cm | 2.2kg	❄
BVLS180-L-CT	FillSafe Zero, Vented Level Sensor, 180mm (7") Nom. Tank Ullage, 7psi GREEN Cap - Cold Temp	2" NPTM, 7PSI	45x20x13cm | 2.2kg	❄

Pilot Line

An important part of a FillSafe Zero system is the Pilot Line. The key role of the Pilot Line is to provide a 'signal' link between the Flow Control Valve and the Level Sensor. The pilot line provides the back pressure signal that the level Sensor has made contact with diesel. This signal causes the flow control valve to close and prevent additional fuel from entering the tank.

A Banlaw FillSafe™ Zero system may incorporate either an External or Internal Pilot Line depending on the choice of flow control valve.

BFCV50H-1.0M

Part Number	Product Description	Tech Specs	Shipping - Dimensions & Weight
BFCV50H-0.5M	FillSafe Zero, Pilot Line, Internal, 0.5m Length	9/16" JICFF, 0.5M	36x42x2cm | 0.46kg
BFCV50H-1.0M	FillSafe Zero, Pilot Line, Internal, 1.0m Length	9/16" JICFF, 1.0M	36x42x2cm | 0.46kg
BFCV50H-1.5M	FillSafe Zero, Pilot Line, Internal, 1.5m Length	9/16" JICFF, 1.5M	36x42x2cm | 0.46kg
BFCV50H-2.0M	FillSafe Zero, Pilot Line, Internal, 2.0m Length	9/16" JICFF, 2.0M	38x44x2cm | 0.5kg
BFCV50H-2.5M	FillSafe Zero, Pilot Line, Internal, 2.5m Length	9/16" JICFF, 2.5M	38x44x2cm | 0.5kg
BFCV50H-3.0M	FillSafe Zero, Pilot Line, Internal, 3.0m Length	9/16" JICFF, 3.0M	38x44x2cm | 0.5kg
BFCV50H-3.5M	FillSafe Zero, Pilot Line, Internal, 3.5m Length	9/16" JICFF, 3.5M	38x44x2cm | 0.5kg
BFCVH-3.0M	FillSafe Zero, Pilot Line, External, 3.0m Length	9/16" JICFF, 3.0M	38x44x2cm | 0.5kg

Pilot Line Adaptor

Part Number	Product Description	Tech Specs	Shipping - Dimensions & Weight
000510	Nipple - 1/4" NPTM - 3/4" JICM	1/4" NPTM - 3/4" JICM	4x2x2cm | 0.2kg

Fuel Management

Banlaw have been planning, designing, manufacturing, and deploying hydrocarbon infrastructure projects of all sizes, in 33 Countries, for 40 years. We are also the only OEM to manufacture a complete liquid hydrocarbon management solution including Auto ID refuelling hardware, fixed or mobile site Controllers, and enterprise-class Resource Management Software.

Banlaw Fuel Management customers secure, monitor, transfer and dispense over 1,000,000,000 litres of fluids per month with reconcilliation rates >99.5%.

Banlaw ResTrack™ is the name of the overarching Banlaw liquid Resource Management System. Banlaw are the only OEM in the world to design, develop and install both software and hardware for total liquid asset control. It is the specialising in all aspects of liquid transfer and management systems that gives Banlaw the experience and expertise to design a system to meet and exceed client needs.

Banlaw FuelTrack™ products are Banlaw patented products developed for the automatic security and recording of diesel fuel transactions. No other OEM of refueling hardware has this capability, making Banlaw the only OEM proud to be able to offer Auto ID products

Go to

Dry Break Auto ID

Splash Fill Auto ID

Dry Break Auto ID

Banlaw are the worlds only manufacturer of direct contact based Automatic Identification Fuel Management Systems. These systems take the human error element out of the recording of fuel transactions, guaranteeing that fuel authorised by the Banlaw ResTrack™ System is going exactly into the right fuel tank. No other form of identification such as fallible manual entry, swipe cards, or long range RFID methods are required. Simply refuel as usual and let the Banlaw ResTrack™ system take care of the fuel reconciliation.

Banlaw FuelTrack™ products have integrated Auto ID functionality in addition to the features of our non-Auto ID equivalent products.

Go to

- Dry Break Nozzle - Auto ID
- Dry Break Receiver - Auto ID
- Swivel - Auto ID
- Break Away Valve - Auto ID
- Fillsafe Zero - Auto ID

Dry Break Nozzle - Auto ID

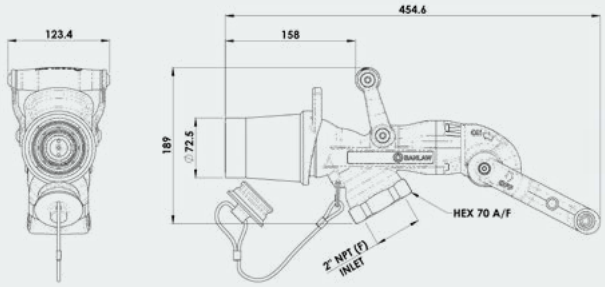

BNMF800M

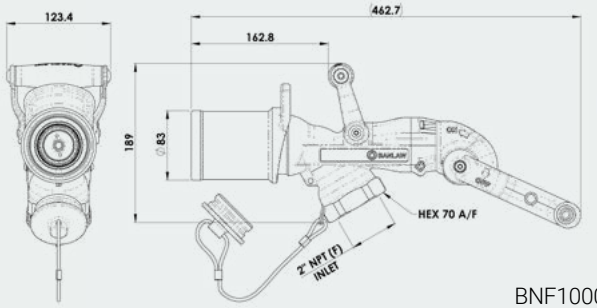

BNF1000M

Part Number	Product Description	Tech Specs	Shipping - Dimensions & Weight	Items Included	
BNMF800L	FuelTrack 800lpm Series Diesel Refuelling Nozzle - Light Spring Setting	2" NPTF, LT	48x20x12cm | 3.9kg	Includes Plug	
BNMF800ML	FuelTrack 800lpm Series Diesel Refuelling Nozzle - Medium/Light Spring Setting	2" NPTF, MED LT	48x20x12cm | 3.9kg	Includes Plug	
BNMF800M	FuelTrack 800lpm Series Diesel Refuelling Nozzle - Medium Spring Setting	2" NPTF. MED	48x20x12cm | 3.9kg	Includes Plug	
BNMF800MH	FuelTrack 800lpm Series Diesel Refuelling Nozzle - Medium/Heavy Spring Setting	2" NPTF, MED HVY	48x20x12cm | 3.9kg	Includes Plug	
BNMF800H	FuelTrack 800lpm Series Diesel Refuelling Nozzle - Heavy Spring Setting	2" NPTF, HVY	48x20x12cm | 3.9kg	Includes Plug	
BNHF800M	FuelTrack 800lpm Series Diesel Refuelling Nozzle - Hydraulic - Medium Spring Setting	2" NPTF, MED	48x20x12cm | 3.9kg	Includes Plug	
BNF1000M	FuelTrack 1000lpm Series Diesel Refuelling Nozzle - Medium Spring Setting	2" NPTF, MED	48x20x12cm | 4.22kg	Includes Plug	
BNF1000MH	FuelTrack 1000lpm Series Diesel Refuelling Nozzle - Medium/Heavy Spring Setting	2" NPTF, MED HVY	48x20x12cm | 4.22kg	Includes Plug	
BNF1000H	FuelTrack 1000lpm Series Diesel Refuelling Nozzle - Heavy Spring Setting	2" NPTF, HVY	48x20x12cm | 4.22kg	Includes Plug	
BNF1000XH	FuelTrack 1000lpm Series Diesel Refuelling Nozzle - Extra Heavy Spring Setting	2" NPTF, XHVY	48x20x12cm | 4.22kg	Includes Plug	
BNMF800L-CT	FuelTrack 800lpm Series Diesel Refuelling Nozzle - Light Spring Setting - Cold Temp	2" NPTF, LT	48x20x12cm | 3.9kg	Includes Plug	❄
BNMF800ML-CT	FuelTrack 800lpm Series Diesel Refuelling Nozzle - Medium/Light Spring Setting - Cold Temp	2" NPTF, MED LT	48x20x12cm | 3.9kg	Includes Plug	❄
BNMF800M-CT	FuelTrack 800lpm Series Diesel Refuelling Nozzle - Medium Spring Setting - Cold Temp	2" NPTF, MED	48x20x12cm | 3.9kg	Includes Plug	❄
BNMF800MH-CT	FuelTrack 800lpm Series Diesel Refuelling Nozzle - Medium/Heavy Spring Setting - Cold Temp	2" NPTF, MED HVY	48x20x12cm | 3.9kg	Includes Plug	❄
BNMF800H-CT	FuelTrack 800lpm Series Diesel Refuelling Nozzle - Heavy Spring Setting - Cold Temp	2" NPTF, HVY	48x20x12cm | 3.9kg	Includes Plug	❄
BNF1000M-CT	FuelTrack 1000lpm Series Diesel Refuelling Nozzle - Medium Spring Setting - Cold Temp	2" NPTF, MED	48x20x12cm | 4.22kg	Includes Plug	❄
BNF1000MH-CT	FuelTrack 1000lpm Series Diesel Refuelling Nozzle - Medium/Heavy Spring Setting - Cold Temp	2" NPTF, MED HVY	48x20x12cm | 4.22kg	Includes Plug	❄
BNF1000H-CT	FuelTrack 1000lpm Series Diesel Refuelling Nozzle - Heavy Spring Setting - Cold Temp	2" NPTF, HVY	48x20x12cm | 4.22kg	Includes Plug	❄
BNF1000XH-CT	FuelTrack 1000lpm Series Diesel Refuelling Nozzle - Extra Heavy Spring Setting - Cold Temp	2" NPTF, XHVY	48x20x12cm | 4.22kg	Includes Plug	❄

Replacement parts & kits on page 77

Dry Break Receiver - Auto ID

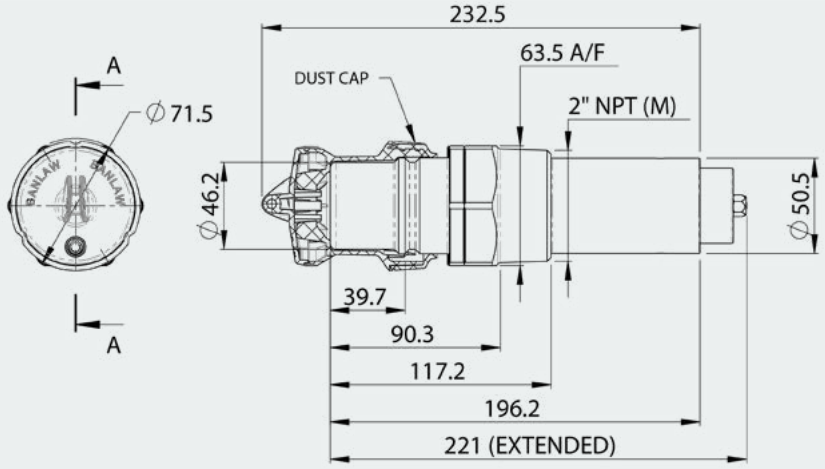

LEFT TO RIGHT: BFT23CAT / BFT43KS / BFT23KS / BFTCVR23KR2

Part Number	Product Description	Tech Specs	Shipping - Dimensions & Weight	Items Included	
BFT23KLS	FuelTrack 800lpm 23 Series Receiver- Light Spring Setting	2" NPTM, LT	13x8x8cm | 1.16kg	Includes Cap	
BFT23KS	FuelTrack 800lpm 23 Series Receiver- Medium Spring Setting	2" NPTM, MED	13x8x8cm | 1.16kg	Includes Cap	
BFT23KH	FuelTrack 800lpm 23 Series Receiver- Heavy Spring Setting	2" NPTM, HVY	13x8x8cm | 1.16kg	Includes Cap	
BFT23KCAT	FuelTrack 800lpm 23 Series CAT Receiver- Light Spring Setting	CODE61, LT, CAT	13x8x8cm | 1.16kg	Includes Cap	
BFT23KH15	FuelTrack 800lpm 23 Series Hydraulic Receiver- Light Spring Setting	1-1/2" NPTM, LT	13x8x8cm | 1.16kg	Includes Cap	
BFTCVR23KR2	FuelTrack 800lpm 23 Series Check Valve Receiver- Medium Spring Setting	2" NPTM, MED	24x8x8cm | 1.58kg	Includes Cap	
BFT43KLS	FuelTrack 1000lpm 43 Series Receiver- Light Spring Setting	2" NPTM, LT	13x6x6cm | 1.36kg	Includes Cap	
BFT43KS	FuelTrack 1000lpm 43 Series Receiver- Medium Spring Setting	2" NPTM, MED	13x6x6cm | 1.36kg	Includes Cap	
BFT43KHS	FuelTrack 1000lpm 43 Series Receiver- Heavy Spring Setting	2" NPTM, HVY	13x6x6cm | 1.36kg	Includes Cap	
BFT23KLS-CT	FuelTrack 800lpm 23 Series Receiver- Light Spring Setting - Cold Temp	2" NPTM, LT	13x8x8cm | 1.16kg	Includes Cap	❄
BFT23KS-CT	FuelTrack 800lpm 23 Series Receiver- Medium Spring Setting - Cold Temp	2" NPTM, MED	13x8x8cm | 1.16kg	Includes Cap	❄
BFT23KH-CT	FuelTrack 800lpm 23 Series Receiver- Heavy Spring Setting - Cold Temp	2" NPTM, HVY	13x8x8cm | 1.16kg	Includes Cap	❄
BFT23KCAT-CT	FuelTrack 800lpm 23 Series CAT Receiver- Light Spring Setting - Cold Temp	CODE61, LT, CAT	13x8x8cm | 1.16kg	Includes Cap	❄
BFTCVR23KR2-CT	FuelTrack 800lpm 23 Series Check Valve Receiver- Medium Spring Setting - Cold Temp	2" NPTM, MED	24x8x8cm | 1.58kg	Includes Cap	❄
BFT43KLS-CT	FuelTrack 1000lpm 43 Series Receiver- Light Spring Setting - Cold Temp	2" NPTM, LT	13x6x6cm | 1.36kg	Includes Cap	❄
BFT43KS-CT	FuelTrack 1000lpm 43 Series Receiver- Medium Spring Setting - Cold Temp	2" NPTM, MED	13x6x6cm | 1.36kg	Includes Cap	❄
BFT43KHS-CT	FuelTrack 1000lpm 43 Series Receiver- Heavy Spring Setting - Cold Temp	2" NPTM, HVY	13x6x6cm | 1.36kg	Includes Cap	❄

Replacement Parts & Kits on page 77

Swivel - Auto ID

Part Number	Product Description	Tech Specs	Shipping - Dimensions & Weight
BFT33	Swivel 2" NPT (Male) x 1-1/2" NPT (Female)	2" NPTM, 1-1/2" NPTF	8x8x15cm | 1.13kg
BFT34	Swivel 2" NPT (Male) 2"NPT (Female)	2" NPTM, 2" NPTF	8x8x15cm | 1.13kg
BFT33-CT	Swivel 2" NPT (Male) x 1-1/2" NPT (Female) - Cold Temp	2" NPTM, 1-1/2" NPTF	8x8x15cm | 1.13kg
BFT34-CT	Swivel 2" NPT (Male) x 2" NPT (Female) - Cold Temp	2" NPTM, 2" NPTF	8x8x15cm | 1.13kg

Break Away Valve - Auto ID

Part Number	Product Description	Tech Specs	Shipping - Dimensions & Weight
BFT4WR2-50N	FuelTrack Break Away Valve - 2" NPT, Gen 2	2" NPTM	29x11x11cm | 3.16kg
BFT4WR2-50	FuelTrack Break Away Valve - 2" BSPT, Gen 2	2" BSPTM	29x11x11cm | 3.16kg
BFT4WR2-75N	FuelTrack Break Away Valve - 3" NPT, Gen 2	3" NPTM	29x11x11cm | 5.5kg
BFT4WR2-75	FuelTrack Break Away Valve - 3" BSPT, Gen 2	3" BSPTM	29x11x11cm | 5.5kg
BFT4WR2-50N-CT	FuelTrack Break Away Valve - 2" NPT, Gen 2 - Cold Temp	2" NPTM	29x11x11cm | 3.16kg
BFT4WR2-50-CT	FuelTrack Break Away Valve - 2" BSPT, Gen 2, Cold Temp	2" BSPTM	29x11x11cm | 3.16kg
BFT4WR2-75N-CT	FuelTrack Break Away Valve - 3" NPT, Gen 2 - Cold Temp	3" NPTM	29x11x11cm | 5.5kg
BFT4WR2-75-CT	FuelTrack Break Away Valve - 3" BSPT, Gen 2 - Cold Temp	3" BSPTM	29x11x11cm | 5.5kg

Replacement parts & kits on page 77

FillSafe Zero - Auto ID

Part Number	Product Description	Tech Specs	Shipping - Dimensions & Weight	Items Included
BFTFCV50	FillSafe Zero, FuelTrack Flow control Valve, 2" NPT (M), Mining	2" NPTM	29x8x8cm | 1.73kg	Includes Cap
BFTFCV50R	FillSafe Zero, FuelTrack Flow control Valve, 2" NPT (M) - RAIL	2" NPTM	29x8x8cm | 1.73kg	Includes Cap
BFTFCV23	FillSafe Zero - FuelTrack Flow Control Valve *Suits 800 Series Mining Nozzle*	4" NPTM	17x12x12cm | 2.02kg	Includes Cap
BFTFCV23R	FillSafe Zero - Flow Control Valve *Suits 800 Series FuelTrack Rail Nozzle* - RAIL	4" NPTM	17x12x12cm | 2.02kg	Includes Cap
BFTFCV43	FillSafe Zero - Flow Control Valve *Suits 1000 Series FuelTrack Nozzle*	4" NPTM	17x12x12cm | 2.1kg	Includes Cap
BFTFCV50-CT	FillSafe Zero, FuelTrack Flow control Valve, 2" NPT (M), Mining - Cold Temp	2" NPTM	29x8x8cm | 1.73kg	Includes Cap
BFTFCV50R-CT	FillSafe Zero, FuelTrack Flow control Valve, 2" NPT (M) - RAIL - Cold Temp	2" NPTM	29x8x8cm | 1.73kg	Includes Cap
BFTFCV23-CT	FillSafe Zero - FuelTrack Flow Control Valve *Suits 800 Series Mining Nozzle* - Cold Temp	4" NPTM	17x12x12cm | 2.02kg	Includes Cap
BFTFCV23R-CT	FillSafe Zero - FuelTrack Flow Control Valve *Suits 800 Series FuelTrack Rail Nozzle* - RAIL - Cold Temp	4" NPTM	17x12x12cm | 2.02kg	Includes Cap
BFTFCV43-CT	FillSafe Zero - FuelTrack Flow Control Valve *Suits 1000 Series FuelTrack Nozzle* - Cold Temp	4" NPTM	17x12x12cm | 2.1kg	Includes Cap

Splash Fill Auto ID

Go to

Splash Fill Nozzle - Auto ID

Splash Fill Ring - Auto ID

Splash Fill Nozzle - Auto ID

BFTSW018A

Part Number	Product Description	Tech Specs	Shipping - Dimensions & Weight
BFTSW036A	FuelTrack Wireless Diesel Refuelling Nozzle - 3/4", ZVA, uNR-B, Diesel, BLACK	3/4" NPTF	6x28x44cm | 2.7kg
BFTSW038A	FuelTrack Wireless Diesel Refuelling Nozzle - 1", ZVA, uNR-B, Diesel, BLACK	1" NPTF	6x28x45cm | 2.7kg
BFTSW002A	FuelTrack Wireless Diesel Refuelling Nozzle - 3/4", 11B, uNR-F, Diesel, BLACK (For Australia)	3/4" NPTF	6x28x46cm | 2.7kg
BFTSW018A	FuelTrack Wireless Diesel Refuelling Nozzle - 1", 7H, uNR-B, Diesel/ULP, BLACK (Diesel in Australia, ULP in USA)	1" NPTF	6x28x47cm | 2.7kg
BFTSW026A	FuelTrack Wireless Diesel Refuelling Nozzle - 3/4", 11B, uNR-F, Diesel, GREEN (For USA)	3/4" NPTF	6x28x48cm | 2.7kg
BFTSW034A	FuelTrack Wireless Diesel Refuelling Nozzle - 1", 7H, uNR-B, Diesel, GREEN (For USA)	1" NPTF	6x28x49cm | 2.7kg
BFTSW010A	FuelTrack Wireless Unleaded Refuelling Nozzle - 3/4", 11BP, uNR-F, ULP, Yellow (For Australia)	3/4" NPTF	6x28x50cm | 2.7kg
BFTSW030A	FuelTrack Wireless Unleaded Refuelling Nozzle - 3/4", 11BP, uNR-F, ULP, BLACK (For USA)	3/4" NPTF	6x28x51cm | 2.7kg

Splash Fill Ring - Auto ID

BFTSW205

Part Number	Product Description	Tech Specs	Shipping - Dimensions & Weight
BFTSW204	FuelTrack Wireless - Light Vehicle Identification Coil & HITAG ID Chip (55mm internal diameter)	55mm Dia	1x7x20cm | 0.1kg
BFTSW201	FuelTrack Wireless - Light Vehicle Identification Coil & HITAG ID Chip (75mm internal diameter)	75mm Dia	1x8x20cm | 0.1kg
BFTSW205	FuelTrack Wireless - Light Vehicle Identification Coil & HITAG ID Chip (80mm internal diameter)	80mm Dia	1x9x20cm | 0.1kg
BFTSW206	FuelTrack Wireless - Light Vehicle Identification Coil & HITAG ID Chip (90mm internal diameter)	90mm Dia	1x10x20cm | 0.1kg
BFTSW207	FuelTrack Wireless - Light Vehicle Identification Coil & HITAG ID Chip (95mm internal diameter)	95mm Dia	1x11x20cm | 0.1kg
BFTSW208	FuelTrack Wireless - Light Vehicle Identification Coil & HITAG ID Chip (110mm internal diameter)	110mm Dia	1.1x12x20cm | 0.2kg
BFTSW209	FuelTrack Wireless - Light Vehicle Identification Coil & HITAG ID Chip (120mm internal diameter)	120mm Dia	1.2x13x20cm | 0.2kg
BFTSW210	FuelTrack Wireless - Light Vehicle Identification Coil & HITAG ID Chip (130mm internal diameter)	130mm Dia	1.3x14x20cm | 0.2kg
BFTSW211	FuelTrack Wireless - Light Vehicle Identification Coil & HITAG ID Chip (145mm internal diameter)	145mm Dia	1.5x15x20cm | 0.2kg

Tools, Replacement Parts & Accessories

Banlaw tools and replacements parts simplify the maintenance of our products, and extend their serviceable life.

Go to

Tools | Replacement Parts | Accessories

Tools

Refuelling Tools

Receiver Socket

Part Number	Product Description	Tech Specs	Shipping - Dimensions & Weight
AUS23SOCKET	800lpm 23 Series Receiver Tool - Socket 3/4" square drive - Rail	TOOL	8x8x12cm | 1.5kg
AUSRSOCKET	800 and 1000 Series Receiver Socket Tool (excluding RAIL)	TOOL	8x8x11cm | 1.5kg

Fluid Transfer Tools

LubeCentral Socket

Part Number	Product Description	Tech Specs	Shipping - Dimensions & Weight
BPLRSOCKET	Socket 54mm - Suit BPLR Evac Range Receiver	TOOL	6x6x9cm | 0.1kg

Overfill Protection Tools

Flow Control Valve Socket

Part Number	Product Description	Tech Specs	Shipping - Dimensions & Weight
BFCVSOCKET	FillSafe Zero 4" Control Valve Socket Tool	TOOL	12x12x14cm | 6.2kg

Replacement Parts

Refuelling Kits

Refuelling Receiver Cap

Part Number	Product Description	Tech Specs	Shipping - Dimensions & Weight	
AUS23C	800lpm 23 Series Receiver Cap	CAP	9x7x7cm | 0.12kg	
AUS43C	Receiver Cap (Aluminum) to suit 1000 Series Receivers	CAP	9x7x7cm | 0.29kg	
AUS43C-CT	Receiver Cap (Aluminum) to suit 1000 Series Cold Temp Receivers	CAP	9x7x7cm | 0.29kg	❄
AUS46C	Underground 46 Series Receiver - Cap	CAP	11x7x7cm | 0.15kg	

Nozzle Spare Parts

Part Number	Product Description	Tech Specs	Shipping - Dimensions & Weight
AUS21A-P	800lpm Series - Nozzle Plug Assembly	PLUG	6x6x4cm | 0.1kg
BNM800240A	800lpm Series Diesel Refuelling Nozzle - Repair parts - D Handle Assembly	SPARE	10x12x3cm | 0.32kg
AUS22A-P	1000lpm Series - Nozzle Plug Assembly	PLUG	7x7x4cm | 0.2kg

Break Away Valve Repair Kit

Part Number	Product Description	Tech Specs	Shipping - Dimensions & Weight	Items Included	
AUS4WKIT	Break Away Valve - 2" Repair Kit	SPARE	12x10x1cm | 0.07kg	Inc Studs, Chain & O-Ring	
AUS4WKIT-HT	Break Away Valve - 2" Repair Kit, High Tensile*	SPARE	12x10x1cm | 0.07kg	Inc Studs, Chain & O-Ring	
AUS4WKIT-75	Break Away Valve - 3" Repair Kit	SPARE	12x10x1cm | 0.07kg	Inc Studs, Chain & O-Ring	
AUS4WKIT-75HT	Break Away Valve - 3" Repair Kit, High Tensile*	SPARE	12x10x1cm | 0.07kg	Inc Studs, Chain & O-Ring	
AUS4WKIT-CT	Break Away Valve - 2" Repair Kit - Cold Temp	SPARE	12x10x1cm | 0.07kg	Inc Studs, Chain & O-Ring	❄
AUS4WKIT-HT-CT	Break Away Valve - 2" Repair Kit High Tensile* - Cold Temp	SPARE	12x10x1cm | 0.07kg	Inc Studs, Chain & O-Ring	❄
AUS4WKIT-75-CT	Break Away Valve - 3" Repair Kit - Cold Temp	SPARE	12x10x1cm | 0.07kg	Inc Studs, Chain & O-Ring	❄
AUS4WKIT-75HT-CT	Break Away Valve - 3" Repair Kit High Tensile* - Cold Temp	SPARE	12x10x1cm | 0.07kg	Inc Studs, Chain & O-Ring	❄

*High Tensile kits require an additional 18% of breaking separation force over standard. They should only be used to counteract a higher than usual pre-load force such as long heavy hoses on tall loading arms.

Check Valve Receiver Kit

Part Number	Product Description	Tech Specs	Shipping - Dimensions & Weight	Items Included	
BCVR23KIT	800lpm 23 Series Check Valve Receiver Front End Kit	SPARE	14x13x4cm | 0.44kg	Includes Cap	
BFTCVR23KIT	FuelTrack 800lpm 23 Series Check Valve Receiver Front End Kit	SPARE	13x13x7cm | 0.44kg	Includes Cap	
BCVR23KIT-CT	800lpm 23 Series Check Valve Receiver Front End Kit - Cold Temp	SPARE	14x13x4cm | 0.44kg	Includes Cap	❄
BFTCVR23KIT-CT	FuelTrack 800lpm 23 Series Check Valve Receiver Front End Kit - Cold Temp	SPARE	13x13x7cm | 0.44kg	Includes Cap	❄

Vent Servicing Kit

Part Number	Product Description	Tech Specs	Shipping - Dimensions & Weight	Items Included
BFV225-KIT	UFFV Kit- Air Filter Kit 3µm (abs.) Suits BRFB01A and all BFV225 Series Vents	KIT	14x14x17cm | 1.17kg	Filter, Gasket, O-ring
BP125KIT	Service Kit, BP125 Series vents, 10µm (nom.)	KIT	15x14x5cm | 0.09kg	10µm Filter, 0-rings, Screw

Overfill Protection Kits

BCVR23 SERIES FRONT END KIT

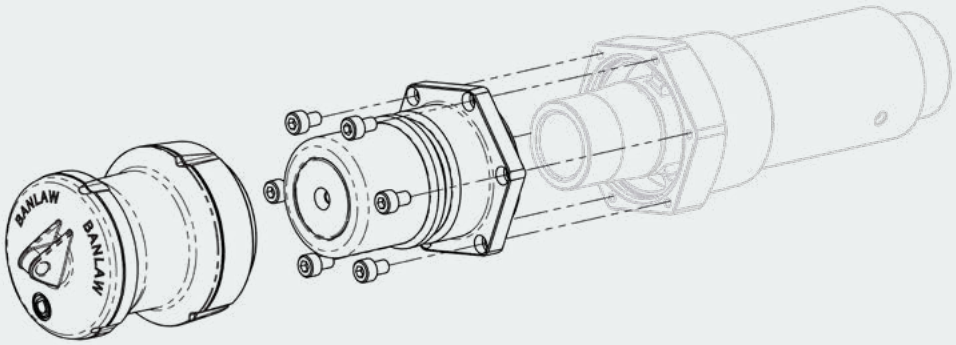

Control Valve Servicing Kit

Part Number	Product Description	Shipping - Dimensions & Weight	Items Included	
BFCV50-KIT	FillSafe Zero Replacement Front End Kit, Suits BFCV50 Control Valve	13x13x7cm | 0.5kg	Includes Cap	
BFCV50R-KIT	FillSafe Zero Replacement Front End Kit, Suits BFCV50R Control Valve	13x13x7cm | 0.5kg	Includes Cap	
BFTFCV50-KIT	FillSafe Zero Replacement Front End Kit, Suits BFTFCV50 Control Valve	13x13x7cm | 0.5kg	Includes Cap	
BFTFCV50R-KIT	FillSafe Zero Replacement Front End Kit, Suits BFTFCV50R Control Valve	13x13x7cm | 0.5kg	Includes Cap	
BFCV23-KIT	FillSafe Zero Replacement Front End Kit, Suits BFCV23 Control Valve	13x13x7cm | 0.5kg	Includes Cap	
BFCV23R-KIT	FillSafe Zero Replacement Front End Kit, Suits BFCV23R Control Valve	13x13x7cm | 0.5kg	Includes Cap	
BFTFCV23-KIT	FillSafe Zero Replacement Front End Kit, Suits BFTFCV23 Control Valve	13x13x7cm | 0.5kg	Includes Cap	
BFTFCV23R-KIT	FillSafe Zero Replacement Front End Kit, Suits BFTFCV23R Control Valve	13x13x7cm | 0.5kg	Includes Cap	
BFCV43-KIT	FillSafe Zero Replacement Front End Kit, Suits BFCV43 Control Valve	13x13x7cm | 0.5kg	Includes Cap	
BFTFCV43-KIT	FillSafe Zero Replacement Front End Kit, Suits BFTFCV43 Control Valve	13x13x7cm | 0.5kg	Includes Cap	
BFCV50-CT-KIT	FillSafe Zero Replacement Front End Kit, Suits BFCV50-CT Control Valve	13x13x7cm | 0.5kg	Includes Cap	❄
BFCV50R-CT-KIT	FillSafe Zero Replacement Front End Kit, Suits BFCV50R-CT Control Valve	13x13x7cm | 0.5kg	Includes Cap	❄
BFTFCV50-CT-KIT	FillSafe Zero Replacement Front End Kit, Suits BFTFCV50-CT Control Valve	13x13x7cm | 0.5kg	Includes Cap	❄
BFTFCV50R-CT-KIT	FillSafe Zero Replacement Front End Kit, Suits BFTFCV50R-CT Control Valve	13x13x7cm | 0.5kg	Includes Cap	❄
BFCV23-CT-KIT	FillSafe Zero Replacement Front End Kit, Suits BFCV23-CT Control Valve	13x13x7cm | 0.5kg	Includes Cap	❄
BFCV23R-CT-KIT	FillSafe Zero Replacement Front End Kit, Suits BFCV23R-CT Control Valve	13x13x7cm | 0.5kg	Includes Cap	❄
BFTFCV23-CT-KIT	FillSafe Zero Replacement Front End Kit, Suits BFTFCV23-CT Control Valve	13x13x7cm | 0.5kg	Includes Cap	❄
BFTFCV23R-CT-KIT	FillSafe Zero Replacement Front End Kit, Suits BFTFCV23R-CT Control Valve	13x13x7cm | 0.5kg	Includes Cap	❄
BFCV43-CT-KIT	FillSafe Zero Replacement Front End Kit, Suits BFCV43-CT Control Valve	13x13x7cm | 0.5kg	Includes Cap	❄
BFTFCV43-CT-KIT	FillSafe Zero Replacement Front End Kit, Suits BFTFCV43-CT Control Valve	13x13x7cm | 0.5kg	Includes Cap	❄

Accessories

Go to

Refuelling Accessories | Fluid Transfer Accessories | Fuel Management Accessories

Refuelling Accessories

Dry Break Nozzle Adaptor

Warning: Dry Break Nozzle Adaptors override the auto-shutoff functionality of Dry Break Nozzles. They allow for Dry Break Nozzles to be adapted and used for 'Splash Fill' refuelling when on-site processes require such a solution. Before purchasing this product, please speak with a Banlaw Engineer to discuss process risk, operator training, and whether this item is actually the most appropriate solution.

Part Number	Product Description		Tech Specs	Shipping - Dimensions & Weight
AUS6A	800lpm Series - Splash fill Straight Pipe Adaptor	*	ADAPTOR	6x6x31cm | 1.0kg
AUS6B	800lpm Series - Splash fill 90 degree Bent Pipe Adaptor	*	ADAPTOR, 90 DEG	48x30x7cm | 1.23kg
AUS6C	Underground 45 Series - Splash fill 90 degree Bent Pipe Adaptor	*	ADAPTOR, 90 DEG	22x18x7cm | 1.2kg
AUS6C-BV	Underground 45 Series - Splash fill 90 degree Bent Pipe Adaptor c/w Ball Valve	*	ADAPTOR, 90 DEG	52x35x8cm | 3.0kg

Vent Adaptor

Part Number	Product Description	Tech Specs	Shipping - Dimensions & Weight
AUS25AA-1	2" NPT (Female) Half Coupling (Not pacified) can be used for all vents	ADAPTOR	7x7x5cm | 0.39kg
AUS46013	1-1/2" NPT (Female) Half Coupling (Not pacified)	ADAPTOR	6x6x4cm | 0.39kg

Break Away Valve Hose Adaptor

Part Number	Product Description	Tech Specs	Shipping - Dimensions & Weight
BFT4W029	Break Away Valve Hose Adaptor 3"BSP/F - 2.5" JIC/M	3" BSPF, 2-1/2" JICM	6x6x10cm | 0.6kg
BFT4W030	Break Away Valve Hose Adaptor 2"BSP/F - 2.5" JIC/M	2" BSPF, 2-1/2" JICM	6x6x10cm | 0.6kg
BFT4W031	Break Away Valve Hose Adaptor 3"NPT/F - 2.5" JIC/M	3" NPTF, 2-1/2" JICM	6x6x10cm | 0.6kg
BFT4W032	Break Away Valve Hose Adaptor 2"NPT/F - 2.5" JIC/M	2" NPTF, 2-1/2" JICM	6x6x10cm | 0.6kg
BFT4W033	Break Away Valve Hose Adaptor 2" BSP/F - 1 7/8" JIC/M	2" BSPF, 1-7/8" JICM	6x6x10cm | 0.6kg
BFT4W034	Break Away Valve Hose Adaptor 2"NPT/F - 1 7/8" JIC/M	2" NPTF, 1-7/8" JICM	6x6x10cm | 0.6kg

Splash Fill Swivel

Part Number	Product Description	Tech Specs	Shipping - Dimensions & Weight
BFTSW110	3/4" Swivel, NPT, Dual Plane	3/4" NPTMF	10x5x3cm | 0.4kg
BFTSW111	1" Swivel, NPT, Dual Plane	1" NPTMF	13x6x6cm | 0.45kg

* No automatic shut off

Refuelling Accessories

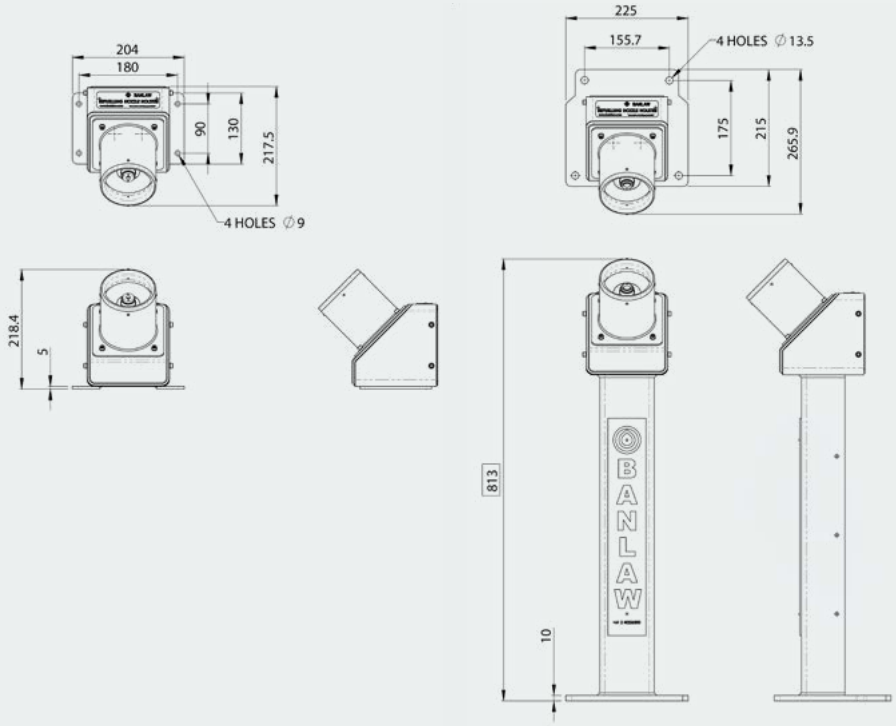

BFTNH203A

BP1000049 BP800049

Dry-Break Nozzle Holsters and Anchors

Part Number	Product Description	Tech Specs	Shipping - Dimensions & Weight
BFTNH203A	800lpm Series - Nozzle Holster Short	UNIT	22x22x22cm | 5.8kg
BFTNH201A	800lpm Series - Nozzle Holster Tall	UNIT	22xx22x82cm | 14.6kg
BFTNH204A	1000lpm Series - Nozzle Holster Short	UNIT	22x22x22cm | 5.9kg
BFTNH202A	1000lpm Series - Nozzle Holster Tall	UNIT	22xx22x82cm | 14.6kg
BP800049	Mounting Anchor Acetal Front End to suit BNM &BNR 800 Series Dry-Break Nozzles	UNIT	7x7x10cm | 1.3kg
BP1000049	Mounting Anchor Acetal Front End to suit BN1000 Series Dry Break Nozzles	UNIT	7x7x10cm | 1.8kg
AUS46014	Mounting Anchor to suit AUS45 Underground Nozzle	UNIT	5x5x7cm | 1.7kg
BP800050	Mounting Anchor to suit BNC40 Bulk Transfer Nozzle	UNIT	7x7x9cm | 1.2kg

Fluid Transfer Accessories

Receiver Cap - Fluid Transfer

Part Number	Product Description	Tech Specs	Shipping - Dimensions & Weight	
BPLR0C	Flush Face BPL Receiver Cap, Acetal - Size 0	CAP	10x7x3cm | 0.07kg	
BPLR1CC	Flush Face BPL Receiver Cap, Evac Series, BRASS, Size 1	CAP	6x6x6cm | 0.13kg	
BPLR1C	Flush Face BPL Receiver Cap, Nylon, Size 1, Non-Evac	CAP	10x7x3cm | 0.07kg	
BPLR2CC	Flush Face BPL Receiver Cap, Evac Series, GOLD, Size 2	CAP	6x6x6cm | 0.13kg	
BPLR3CC	Flush Face BPL Receiver Cap, Evac Series, RED, Size 3	CAP	6x6x6cm | 0.13kg	
BPLR4CC	Flush Face BPL Receiver Cap, Evac Series, BLACK, Size 4	CAP	6x6x6cm | 0.13kg	
BPLR5CC	Flush Face BPL Receiver Cap, Evac Series, GREEN, Size 5	CAP	6x6x6cm | 0.13kg	
BPLR6CC	Flush Face BPL Receiver Cap, Evac Series, BLUE, Size 6	CAP	6x6x6cm | 0.13kg	
BPLR7CC	Flush Face BPL Receiver Cap, Evac Series, PURPLE, Size 7	CAP	6x6x6cm | 0.13kg	
BPLR8CC	Flush Face BPL Receiver Cap, Evac Series, PLATINUM/GREY, Size 8	CAP	6x6x6cm | 0.13kg	
BPLR9CC	Flush Face BPL Receiver Cap, Evac Series, BRONZE/TAN, Size 9	CAP	6x6x6cm | 0.13kg	
BPLR10CC	Flush Face BPL Receiver Cap, Size 10, Evac Series, ORANGE, Size 10	CAP	6x6x6cm | 0.13kg	
BPLR11CC	Flush Face BPL Receiver Cap, SILVER, Size 11	CAP	6x6x6cm | 0.13kg	
GTXRCC	Flush Face Grease Transfer Receiver Cap, BRIGHT BLUE	CAP	6x6x7cm | 0.13kg	
BRC40-C	Bulk Transfer Receiver Cap	CAP	10x7x3cm | 0.07kg	
BPLR1CC-CT	Flush Face BPL Receiver Cap, Evac Series, BRASS, Size 1 - Cold Temp	CAP	6x6x6cm | 0.13kg	❄
BPLR2CC-CT	Flush Face BPL Receiver Cap, Evac Series, GOLD, Size 2- Cold Temp	CAP	6x6x6cm | 0.13kg	❄
BPLR3CC-CT	Flush Face BPL Receiver Cap, Evac Series, RED, Size 3 - Cold Temp	CAP	6x6x6cm | 0.13kg	❄
BPLR4CC-CT	Flush Face BPL Receiver Cap, Evac Series, BLACK, Size 4 - Cold Temp	CAP	6x6x6cm | 0.13kg	❄
BPLR5CC-CT	Flush Face BPL Receiver Cap, Evac Series, GREEN, Size 5 - Cold Temp	CAP	6x6x6cm | 0.13kg	❄
BPLR6CC-CT	Flush Face BPL Receiver Cap, Evac Series, BLUE, Size 6 - Cold Temp	CAP	6x6x6cm | 0.13kg	❄
BPLR7CC-CT	Flush Face BPL Receiver Cap, Evac Series, PURPLE, Size 7 - Cold Temp	CAP	6x6x6cm | 0.13kg	❄
BPLR8CC-CT	Flush Face BPL Receiver Cap, Evac Series, PLATINUM/GREY , Size 8 - Cold Temp	CAP	6x6x6cm | 0.13kg	❄
BPLR9CC-CT	Flush Face BPL Receiver Cap, Evac Series, BRONZE/TAN , Size 9 - Cold Temp	CAP	6x6x6cm | 0.13kg	❄
BPLR10CC-CT	Flush Face BPL Receiver Cap, Size 10, Evac Series, ORANGE, Size 10 - Cold Temp	CAP	6x6x6cm | 0.13kg	❄
BPLR11CC-CT	Flush Face BPL Receiver Cap, SILVER ,Size 11- Cold Temp	CAP	6x6x6cm | 0.13kg	❄
GTXRCC-CT	Flush Face Grease Transfer Receiver Cap, BRIGHT BLUE- Cold Temp	CAP	6x6x7cm | 0.13kg	❄
BRC40-C-CT	Bulk Transfer Receiver Cap - Cold Temp	CAP	10x7x3cm | 0.07kg	❄

Fluid Transfer Accessories

Nozzle Cap - Fluid Transfer

Part Number	Product Description	Tech Specs	Shipping - Dimensions & Weight	
BPLN1C	Flush Face BPL Nozzle Cap, BRASS, Size 1	CAP	10x7x3cm | 0.07kg	
BPLN2C	Flush Face BPL Nozzle Cap, GOLD, Size 2	CAP	10x7x3cm | 0.07kg	
BPLN3C	Flush Face BPL Nozzle Cap, RED, Size 3	CAP	10x7x3cm | 0.07kg	
BPLN4C	Flush Face BPL Nozzle Cap, BLACK, Size 4	CAP	10x7x3cm | 0.07kg	
BPLN5C	Flush Face BPL Nozzle Cap, GREEN, Size 5	CAP	10x7x3cm | 0.07kg	
BPLN6C	Flush Face BPL Nozzle Cap, BLUE, Size 6	CAP	10x7x3cm | 0.07kg	
BPLN7C	Flush Face BPL Nozzle Cap, PURPLE, Size 7	CAP	10x7x3cm | 0.07kg	
BPLN8C	Flush Face BPL Nozzle Cap, PLATINUM/GREY, Size 8	CAP	10x7x3cm | 0.07kg	
BPLN9C	Flush Face BPL Nozzle Cap, BRONZE/TAN, Size 9	CAP	10x7x3cm | 0.07kg	
BPLN10C	Flush Face BPL Nozzle Cap, ORANGE, Size 10	CAP	10x7x3cm | 0.07kg	
BPLN11C	Flush Face BPL Nozzle Cap, SILVER, Size 11	CAP	10x7x3cm | 0.07kg	
BPLN1C-CT	Flush Face BPL Nozzle Cap, Size 1, BRASS Coloured - Cold Temp	CAP	10x7x3cm | 0.07kg	❄
BPLN2C-CT	Flush Face BPL Nozzle Cap, Size 2, GOLD Coloured - Cold Temp	CAP	10x7x3cm | 0.07kg	❄
BPLN3C-CT	Flush Face BPL Nozzle Cap, Size 3, RED Coloured - Cold Temp	CAP	10x7x3cm | 0.07kg	❄
BPLN4C-CT	Flush Face BPL Nozzle Cap, Size 4, BLACK Coloured - Cold Temp	CAP	10x7x3cm | 0.07kg	❄
BPLN5C-CT	Flush Face BPL Nozzle Cap, Size 5, GREEN Coloured - Cold Temp	CAP	10x7x3cm | 0.07kg	❄
BPLN6C-CT	Flush Face BPL Nozzle Cap, Size 6, BLUE Coloured - Cold Temp	CAP	10x7x3cm | 0.07kg	❄
BPLN7C-CT	Flush Face BPL Nozzle Cap, Size 7, PURPLE Coloured - Cold Temp	CAP	10x7x3cm | 0.07kg	❄
BPLN8C-CT	Flush Face BPL Nozzle Cap, Size 8, PLATINUM/GREY Coloured - Cold Temp	CAP	10x7x3cm | 0.07kg	❄
BPLN9C-CT	Flush Face BPL Nozzle Cap, Size 9, BRONZE/TAN Coloured - Cold Temp	CAP	10x7x3cm | 0.07kg	❄
BPLN10C-CT	Flush Face BPL Nozzle Cap, Size 10, ORANGE Coloured - Cold Temp	CAP	10x7x3cm | 0.07kg	❄
BPLN11C-CT	Flush Face BPL Nozzle Cap, Size 11, SILVER Coloured - Cold Temp	CAP	10x7x3cm | 0.07kg	❄

Fuel Management Accessories

Splash Fill Gateway Terminal

Part Number	Product Description	Tech Specs	Shipping - Dimensions & Weight
BFTSW100	FuelTrack Wireless - Gateway Terminal Auto ID Assembly (for use with FMS Controller)	UNIT	21x20x8cm | 0.81kg

Splash Fill Coil Clamps

Part Number	Product Description	Shipping - Dimensions & Weight
BFTCCA	Shaped Coil Zip-Tie Mounting Pads (Pkt 100)	10x6x4cm | 0.22kg
BFTCCL	Shaped Coil Holder Filler Neck (Pkt 100)	19x18x7cm | 0.23kg

Splash Fill AutoID Nozzle Chip Reader

Part Number	Product Description	Shipping - Dimensions & Weight
800960000	FuelTrack Wireless SplashFill Reader - suits OPW11A/B, ZVA24 & ZVA25	5x9x7cm | 0.132kg
800960050	FuelTrack Wireless SplashFill Reader - suits OPW7H	5x9x7cm | 0.132kg

Contact Banlaw today if you need increased Accuracy, Accountability, Security, or Productivity for your fluid assets.

Australia / International

Telephone +61 2 4922 6300

Email sales@banlaw.com

Americas

Telephone +1 385 259 0456

Email americasales@banlaw.com

banlaw.com

BANLAW

Created by **Arrow Strategic Communications**

Banlaw Product Catalogue ARR-107 190905